CSE303 Logic Design II – Assignment 02

#	Student ID	Student Name	Grade (10)
-			

Delivery Date	

1. يتم تسليم التمرين محلولا في خلال أسبوع من تاريخ التمرين، و يتم حذف درجتين من التمرين عن كل أسبوع تأخير
2. يتم التسليم لمعيد المقرر مباشرة
3. تتم أجابه التمرين في نفس ورق الأسئلة

Q1	**7.23** Implement $f(a, b, c, d) = \Sigma\, m(3, 4, 5, 6, 7, 11, 15)$ as a two-level gate circuit, using a minimum number of gates. (a) Use AND gates and NAND gates. (b) Use OR gates and NAND gates. (c) Use NAND gates only.
Sol 1	

Q2

7.26 In the circuit, replace each NOR gate by an AND or OR gate so that the resulting circuit contains the fewest inverters possible. Assume the inputs are available in both true and complemented form. Do *not* replace the exclusive-OR gates.

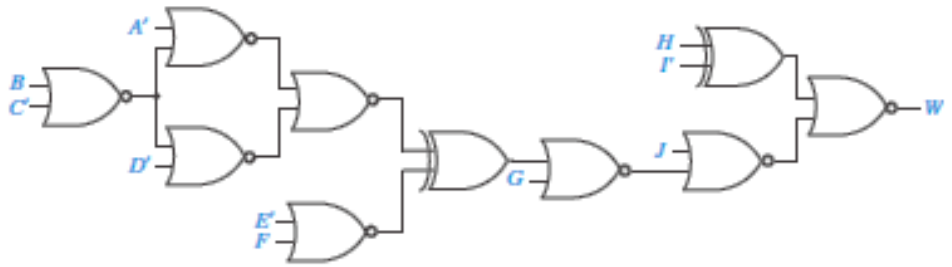

Sol 2

.....

.....

.....

.....

.....

.....

.....

.....

.....

.....

.....

.....

.....

.....

.....

Q3	**7.27** (a) Convert the circuit shown into a four-level circuit only containing AND and OR gates and a minimum number of inverters. (b) Derive a sum-of-products expression for f. (c) Find a circuit that realizes f' containing only NOR gates (no internal inverters). (*Hint:* Use gate conversions to convert the NAND gates in the given circuit to NOR gates.) 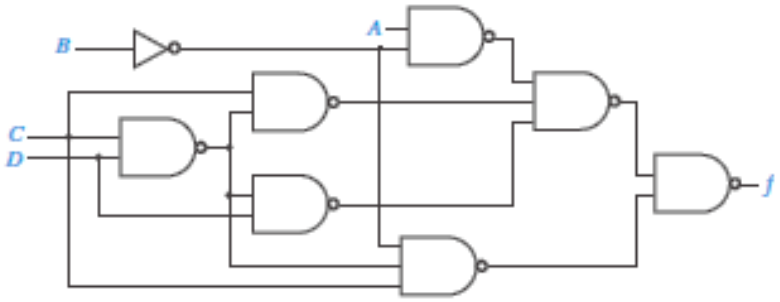
Sol 3	.....

	.....
	.....
	.....
	.....
	.....
	.....
	.....
	.....
	.....
	.....
	.....
	.....
	.....
	.....
	.....
	.....
	.....
	.....
	.....
	.....
	.....
	.....

Q4	**7.39** Find a minimum two-level, multiple-output AND-OR gate circuit to realize these functions (eight gates minimum). $f_1(a,b,c,d) = \Sigma\, m(10,11,12,15) + \Sigma\, d(4,8,14)$ $f_2(a,b,c,d) = \Sigma\, m(0,4,8,9) + \Sigma\, d(1,10,12)$ $f_3(a,b,c,d) = \Sigma\, m(4,11,13,14,15) + \Sigma\, d(5,9,12)$
Sol 4	.....

Q5	**7.36** (a) Find a minimum circuit of two-input AND and two-input OR gates to realize $F(A, B, C, D) = \Sigma\, m(0, 1, 2, 3, 4, 5, 7, 9, 11, 13, 14, 15)$ (b) Convert your circuit to two-input NAND gates. Add inverters where necessary. (c) Repeat (b), except convert to two-input NOR gates.
Sol 5	.....