Introduction To Engineering – Tutorial - 02

#	Student ID	Student Name	Grade (10)
-			

Q1

In the triangle shown $a = 5.3$ in., $\gamma = 42°$, and $b = 6$ in. Define a, γ, and b as variables, and then:

(*a*) Calculate the length b by using the Law of Cosines.
(Law of Cosines: $c^2 = a^2 + b^2 - 2ab\cos\gamma$)

(*b*) Calculate the angles β and γ (in degrees) using the Law of Cosines.

(*c*) Check that the sum of the angles is 180°.

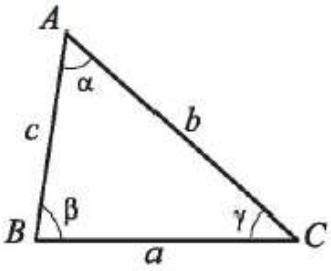

Sol 1

```
clear, clc
a=5.3; gamma=42; b=6;
disp('Part (a)')
c=sqrt(a^2+b^2-2*a*b*cosd(gamma))
disp('Part (b)')
alpha = asind(a*sind(gamma)/c)
beta = asind(b*sind(gamma)/c)
disp('Part (c)')
Total = alpha+beta+gamma
```

```
Part (a)

c =

    4.1019

Part (b)

alpha =

   59.8328

beta =

   78.1672

Part (c)

Total =

   180
```

Q2

In the ice cream cone shown, $L = 4$ in. and $\theta = 35°$. The cone is filled with ice cream such that the portion above the cone is a hemisphere. Determine the volume of the ice cream.

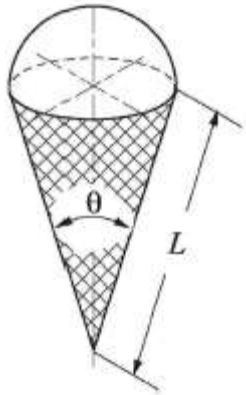

Right Circular Cone $V = \frac{1}{3}\pi r^2 h$

Sphere $V = \frac{4}{3}\pi r^3$

Sol 2

```
clear, clc
L=4; theta=35;
%radius of cone opening and height
r=L*sind(theta/2);
H=L*cosd(theta/2);
%volume of cone + volume of hemisphere
V=pi*r^2*H/3 + 2/3*pi*r^3
```

```
V =

    9.4245
```

Q3

The resonant frequency f (in Hz) for the circuit shown is given by:

$$f = \frac{1}{2\pi}\sqrt{\frac{1}{LC} - \left(\frac{R}{L}\right)^2}$$

Calculate the resonant frequency when $L = 0.15$ henrys, $R = 14$ ohms, and $C = 2.6 \times 10^{-6}$ farads.

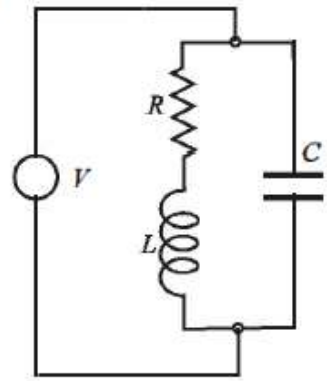

Sol 3

```
clear, clc
L=0.15; R=14; C=2.6e-6;
f=1/(2*pi)*sqrt(1/(L*C)-(R/L)^2)
```

```
f =

  254.4186

>>
```

Q4	Radioactive decay of carbon-14 is used for estimating the age of organic material. The decay is modeled with the exponential function $f(t) = f(0)e^{kt}$, where t is time, $f(0)$ is the amount of material at $t = 0$, $f(t)$ is the amount of material at time t, and k is a constant. Carbon-14 has a half-life of approximately 5,730 years. A sample taken from the ancient footprints of Acahualinca in Nicaragua shows that 77.45% of the initial ($t = 0$) carbon-14 is present. Determine the estimated age of the footprint. Solve the problem by writing a program in a script file. The program first determines the constant k, then calculates t for $f(t) = 0.7745f(0)$, and finally rounds the answer to the nearest year.
Sol 4	

```
clear, clc
k=log(0.5)/5730;
Age=round(log(.7745)/k)
```

```
Age =

        2112
```

Q5	The value B of a principal P that is deposited in a saving account with a fixed annual interest rate r after n years can be calculated by the formula: $$B = P\left(1+\frac{r}{m}\right)^{nm}$$ where m is the number of times that the interest is compounded annually. Consider a \$80,000 deposit for 5 years. Determine how much more money will be earned if the interest is compounded daily instead of yearly.
Sol 5	

```
clear, clc
%an interest rate of 10% is assumed
P=80000; n=5; r=.1;
bonus=P*(1+ r/365)^(365*n) - P*(1+ r)^n
```

```
bonus =

  3.0479e+003

>>
```

Q6

The stress intensity factor K predicts the stress state (stress intensity) near a crack tip. For a plate with a crack and loading shown in the figure, K is given by:

$$K = \sigma\sqrt{\pi a}\left[\frac{1-\frac{a}{2b}+0.326\left(\frac{a}{b}\right)^2}{\sqrt{1-\frac{a}{b}}}\right]$$

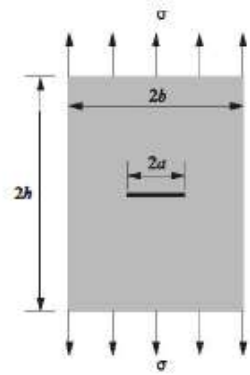

Determine K for the case where $\sigma = 12000$ psi, $h = 5$ in., and $b = 4$ in., and $a = 1.5$ in.

Sol 6

```
clear, clc
sigma=12000; h=5; b=4; a=1.5;
K=sigma*sqrt(pi*a)*(1-a/(2*b)+0.326*(a/b)^2)/sqrt(1-a/b)
```

```
K =

  2.8283e+004
```

Q7	Stirling's approximation for large factorials is given by: $$n! = \sqrt{2\pi n}\left(\frac{n}{e}\right)^n$$ Use the formula for calculating 20!. Compare the result with the true value obtained with MATLAB's built-in function `factorial` by calculating the error ($Error = (TrueVal - ApproxVal)/\ TrueVal$).

Sol 7	`clear, clc`
	`factorial_20=sqrt(2*pi*20)*(20/exp(1))^20`
	`error=(factorial(20)-factorial_20)/factorial(20)`
	
	`factorial_20 =`
	`2.4228e+018`
	
	`error =`
	`0.0042`