Electromagnetic Fields – Tutorial 03 & Assignment 03

Transmission Lines Fundamentals

#	Student ID	Student Name	Grade (10)
-			

Delivery Date	

١. يتم تسليم التمرين محلولا في خلال أسبوع من تاريخ التمرين، و يتم حذف درجتين من التمرين عن كل أسبوع تأخير
٢. يتم التسليم لمعيد المقرر مباشرة
٣. تتم أجابه التمرين في نفس ورق الأسئلة

Q1

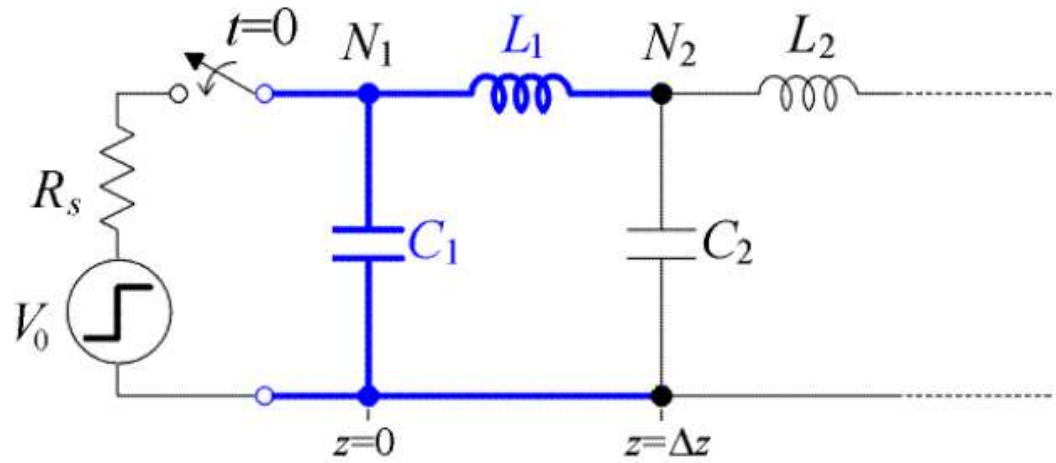

Circuit model of transmission line.

Consider the distributed circuit model of a lossless transmission line shown in Fig.

Assume the line is initially at rest, i.e. $v(z,0^-)=0$ (zero voltage for any node N_i at $t=0^-$), $i(z,0^-)=0$ (zero current for any branch at $t=0^-$).

Part 1	What is the voltage of node N_1 at $t=0^+$, i.e. $v(0,0^+)$? What is the current along L_1 at $t=0^+$, i.e. $i(0,0^+)$? Justify your answers. (*Hint*: Capacitor current: $i=C\cdot\frac{d}{dt}v$, inductor voltage: $v=L\cdot\frac{d}{dt}i$.)
	.....

Part 2	What is the current along C_1 at $t = 0^+$? What is the voltage of node N_2 at $t = 0^+$, i.e. $v(\Delta z, 0^+)$? (*Hint*: Borrow the result of Problem a.)
	.....

Part 3	Describe how do node voltages at N_1, N_2, …, and branch currents along inductors L_1, L_2, … change with time ($t > 0^+$)? Justify the "wave" behavior accordingly.
	………………………………………………………………………………………