Electric Circuits II – Assignment 01

Source Free RC Circuit

#	Student ID	Student Name	Grade (10)
-			

Delivery Date	

١. يتم تسليم التمرين محلولا في خلال أسبوع من تاريخ التمرين، و يتم حذف درجتين من التمرين عن كل أسبوع تأخير
٢. يتم التسليم لمعيد المقرر مباشرة
٣. تتم أجابه التمرين في نفس ورق الأسئلة

Q1

7.2 Find the time constant for the *RC* circuit in Fig. 7.82.

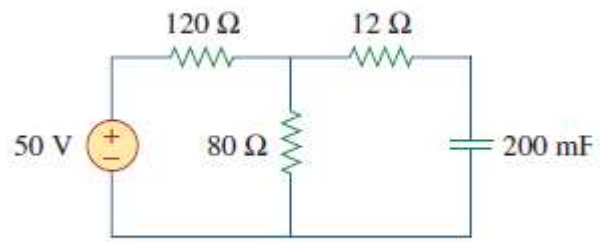

Figure 7.82
For Prob. 7.2.

Sol 1

Q2

7.4 The switch in Fig. 7.84 has been in position A for a long time. Assume the switch moves instantaneously from A to B at $t = 0$. Find v for $t > 0$.

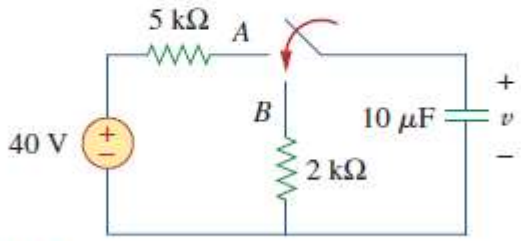

Figure 7.84
For Prob. 7.4.

Sol 2

Q3	**7.6** The switch in Fig. 7.86 has been closed for a long time, and it opens at $t = 0$. Find $v(t)$ for $t \geq 0$. 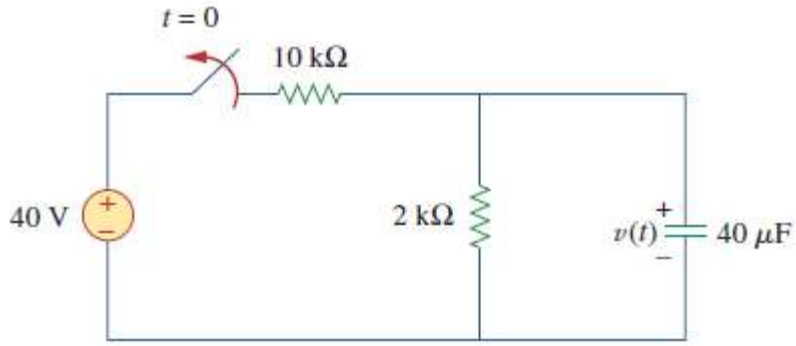 **Figure 7.86** For Prob. 7.6.
Sol 3	.....

Q4

7.8 For the circuit in Fig. 7.88, if

$$v = 10e^{-4t}\ \text{V} \quad \text{and} \quad i = 0.2\,e^{-4t}\ \text{A}, \quad t > 0$$

(a) Find R and C.

(b) Determine the time constant.

(c) Calculate the initial energy in the capacitor.

(d) Obtain the time it takes to dissipate 50 percent of the initial energy.

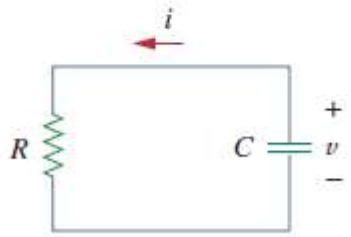

Figure 7.88
For Prob. 7.8.

Sol 4

.....

.....

.....

.....

.....

.....

.....

.....

.....

.....

.....

.....

.....

Q5	**7.10** For the circuit in Fig. 7.90, find $v_o(t)$ for $t > 0$. Determine the time necessary for the capacitor voltage to decay to one-third of its value at $t = 0$. 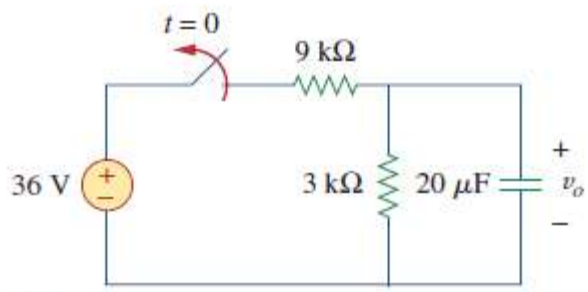 **Figure 7.90** For Prob. 7.10.
Sol 5	.....