Electronic Circuits - Tutorial 08

BJT transistor 2

T & F

#	Question	
1	cutoff and saturation are the two normal states of a linear transistor amplifier.	F
2	When a transistor is saturated, the collector current is maximum.	T
3	Voltage gain of a transistor amplifier depends on the collector resistor and the internal acresistance.	T
4	A transistor in cutoff acts as an open switch.	T

MCQ

#	Question	
1	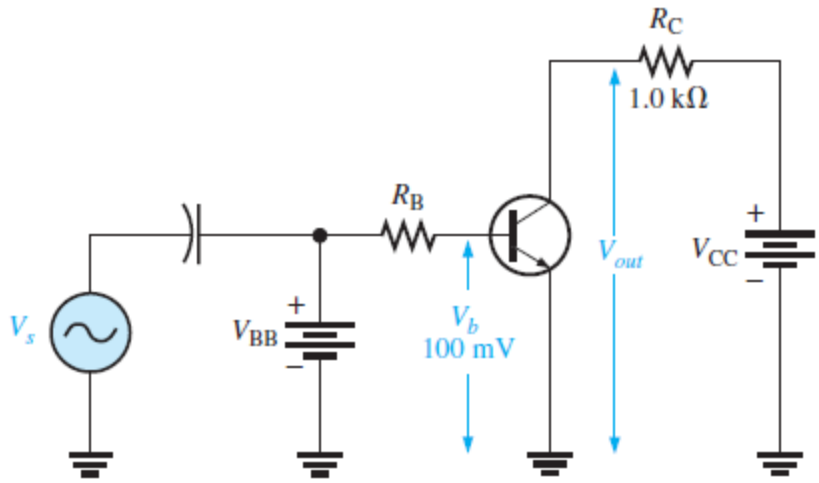 If the amplitude of V_{in} in Figure is decreased, the ac output voltage amplitude will **(a)** increase **(b)** decrease **(c)** not change	b
2	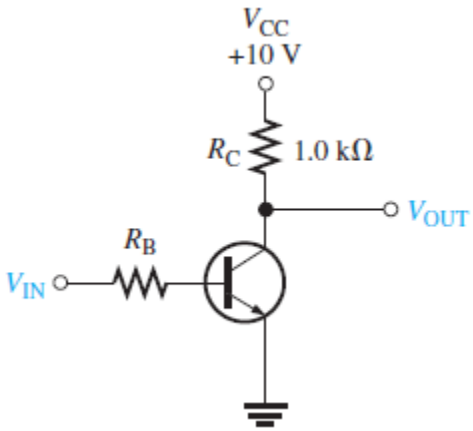 R_C in Figure is reduced in value, the value of $I_{C(sat)}$ will **(a)** increase **(b)** decrease **(c)** not change	a

3	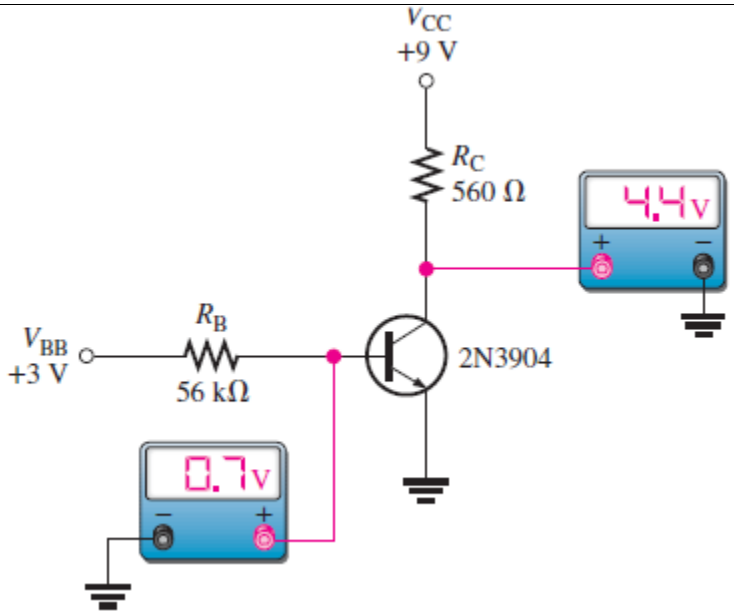 If the transistor in Figure is open from collector to emitter, the collector voltage will **(a)** increase **(b)** decrease **(c)** not change	a
4	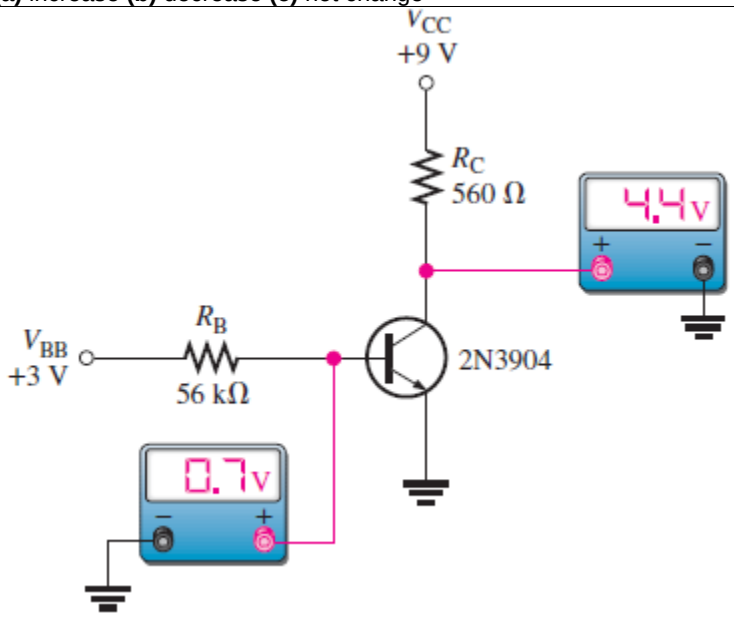 If the emitter in Figure becomes disconnected from ground, the collector voltage will **(a)** increase **(b)** decrease **(c)** not change	a
5	When operated in cutoff and saturation, the transistor acts like a **(a)** linear amplifier **(b)** switch **(c)** variable capacitor **(d)** variable resistor	b
6	In saturation, V_{CE} is **(a)** 0.7 V **(b)** equal to V_{CC} **(c)** minimum **(d)** maximum	c
7	Once in saturation, a further increase in base current will **(a)** cause the collector current to increase **(b)** not affect the collector current **(c)** cause the collector current to decrease **(d)** turn the transistor off	b
8	The relationship between the collector current and a light-generated base current is (a) $I_C = \beta_{DC} I_\lambda$ (b) $I_C = \alpha_{DC} I_\lambda$ (c) $I_C = \lambda I_\lambda$ (d) $I_C = \beta_{DC}^2 I_\lambda$	a

9	In a transistor amplifier, if the base-emitter junction is open, the collector voltage is **(a)** V_{CC} **(b)** 0 V **(c)** floating **(d)** 0.2 V	a

Problems:

Q1	To achieve an output of 10 V with an input of 300 mV, what voltage gain is required?
Sol 1	33.3

Q2	A 50 mV signal is applied to the base of a properly biased transistor with $r'_e = 10\ \Omega$ and $R_C = 560\ \Omega$. Determine the signal voltage at the collector.
Sol 2	.....

Q2	Determine the value of the collector resistor in an *npn* transistor amplifier with $\beta_{DC} = 250$, $V_{BB} = 2.5$ V, $V_{CC} = 9$ V, $V_{CE} = 4$ V, and $R_B = 100$ kΩ.
Sol 3	1.1 kΩ

Q4	What is the dc current gain of each circuit in Figure 4–55? 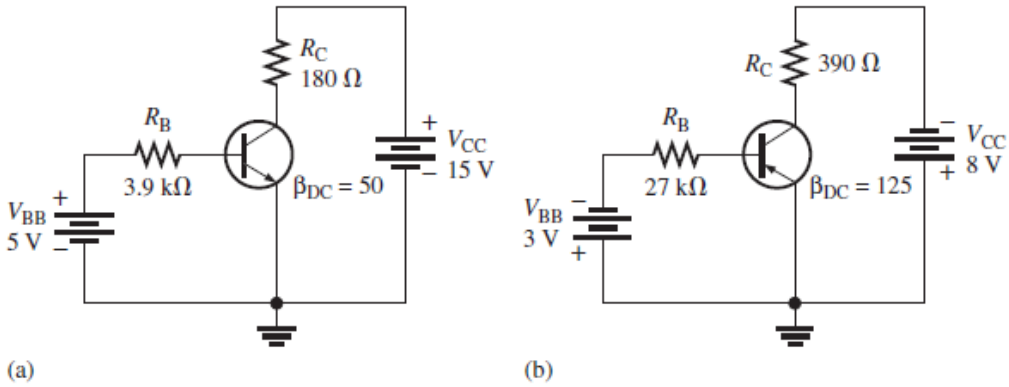
Sol 4	.....

Q5	Determine $I_{C(sat)}$ for the transistor in Figure 4–58. What is the value of I_B necessary to produce saturation? What minimum value of V_{IN} is necessary for saturation? Assume $V_{CE(sat)} = 0$ V. 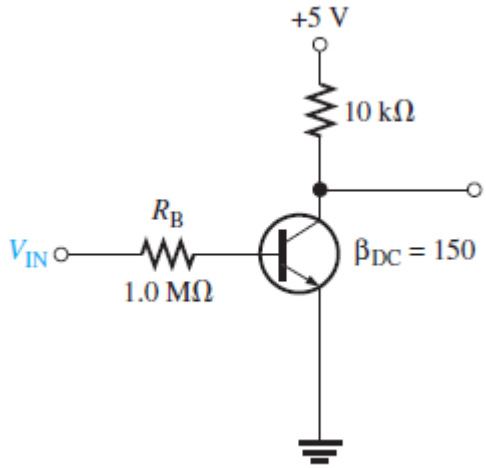
Sol 5	500 μA, 3.33 μA, 4.03 V

Q6	The transistor in Figure 4–59 has a β_{DC} of 50. Determine the value of R_B required to ensure saturation when V_{IN} is 5 V. What must V_{IN} be to cut off the transistor? Assume $V_{CE(sat)} = 0$ V. 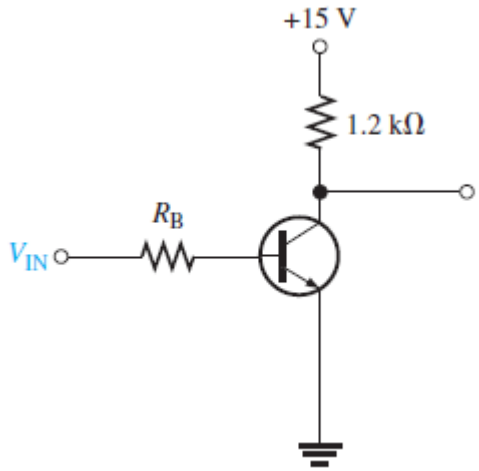
Sol 6	.....

Q7	A certain phototransistor in a circuit has a $\beta_{DC} = 200$. If $I_\lambda = 100\ \mu A$, what is the collector current?
Sol 7	20 mA

Q18	Determine the emitter current in the phototransistor circuit in Figure 4–60 if, for each lm/m^2 of light intensity, 1 μA of base current is produced in the phototransistor. 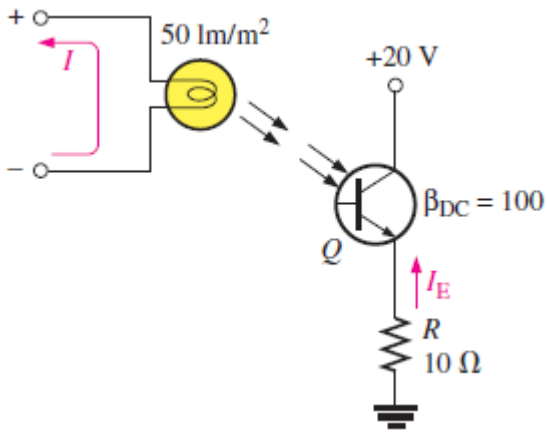
Sol 8	.....

Q9	A particular optical coupler has a current transfer ratio of 30 percent. If the input current is 100 mA, what is the output current?
Sol 9	30 mA

Q10	The optical coupler shown in Figure 4–61 is required to deliver at least 10 mA to the external load. If the current transfer ratio is 60 percent, how much current must be supplied to the input? 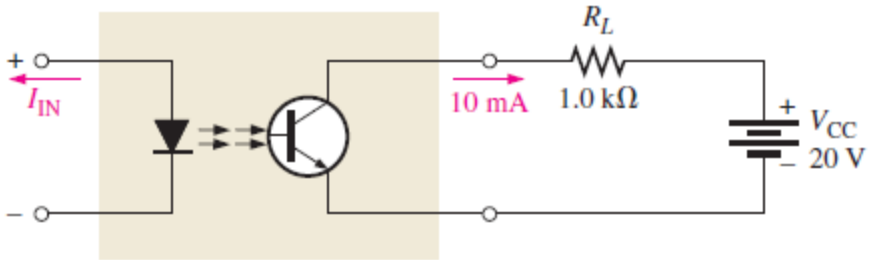
Sol 10	.....