Electronic Circuits - Tutorial 08

BJT transistor 2

T & F

#	Question	
1	Amplification is the output voltage divided by the input current.	F
2	The three regions of a BJT are base, emitter, and cathode.	F
3	Two types of BJT are npn and pnp.	T
4	The dc voltage gain of a transistor is designated bDC.	F

MCQ

#	Question	
1	The approximate voltage across the forward-biased base-emitter junction of a silicon BJT is **(a)** 0 V **(b)** 0.7 V **(c)** 0.3 V **(d)** V_{BB}	b
2	If the output of a transistor amplifier is 5 V rms and the input is 100 mV rms, the voltage gain is **(a)** 5 **(b)** 500 **(c)** 50 **(d)** 100	c
3	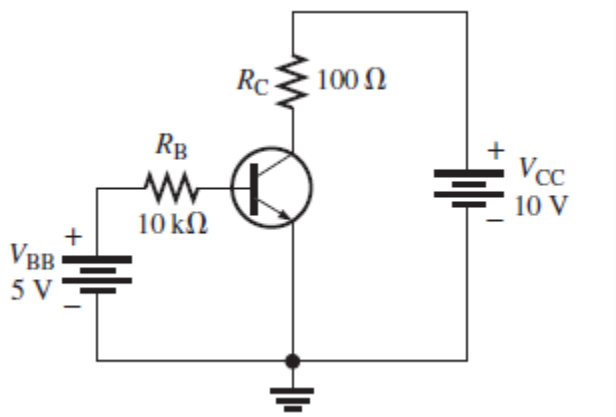 If a transistor with a higher β_{DC} is used in Figure, the emitter current will **(a)** increase **(b)** decrease **(c)** not change	a
4	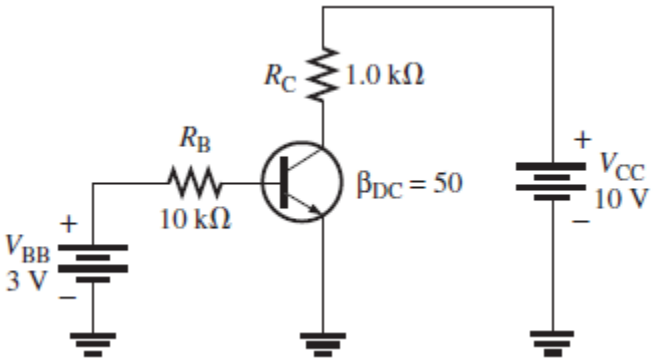 If V_{BB} is reduced in Figure, the collector current will **(a)** increase **(b)** decrease **(c)** not change	b
5	In a *pnp* transistor, the *p* regions are **(a)** base and emitter **(b)** base and collector **(c)** emitter and collector	c
6	The emitter current is always **(a)** greater than the base current **(b)** less than the collector current **(c)** greater than the collector current **(d)** answers (a) and (c)	d
7	If I_C is 50 times larger than I_B, then is β_{dc} **(a)** 0.02 **(b)** 100 **(c)** 50 **(d)** 500	c
8	The bias condition for a transistor to be used as a linear amplifier is called **(a)** forward-reverse **(b)** forward-forward **(c)** reverse-reverse **(d)** collector bias	a
9	When a lowercase is used in relation to a transistor, it refers to **(a)** a low resistance **(b)** a wire resistance **(c)** an internal ac resistance **(d)** a source resistance	c

Problems:

Q1	What is the β_{DC} of a transistor if $I_C = 20.3$ mA and $I_E = 20.5$ mA?
Sol 1	..... 101.5 .....

Q2	What is the α_{DC} if $I_C = 5.35$ mA and $I_B = 50\ \mu$A?
Sol 2	.....

Q3	A certain transistor exhibits an α_{DC} of 0.96. Determine I_C when $I_E = 9.35$ mA.
Sol 3	8.98 mA

Q4	A base current of 50 μA is applied to the transistor in Figure 4–53, and a voltage of 5 V is dropped across R_C. Determine the β_{DC} of the transistor. GURE 4–53 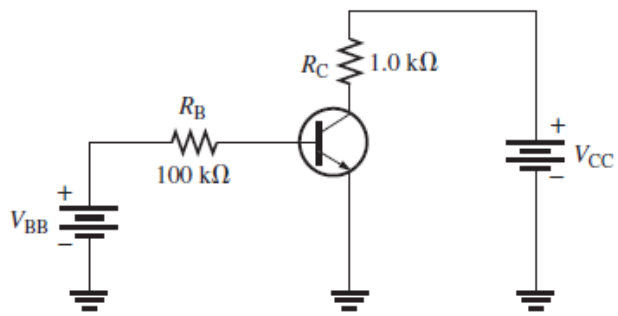
Sol 4	.....

Q5

Calculate α_{DC} for the transistor in

A base current of 50 μA is applied to the transistor in Figure 4–53, and a voltage of 5 V is dropped across R_C. Determine the β_{DC} of the transistor.

GURE 4–53

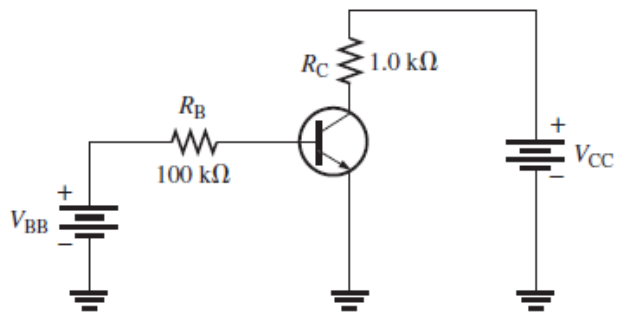

Sol 5

0.99

Q6	Assume that the transistor in the circuit of Figure 4–53 is replaced with one having a β_{dc} of 200. Determine I_B, I_C, I_E, and V_{CE} given that $V_{CC} = 10$ V and $V_{BB} = 3$ V. GURE 4–53 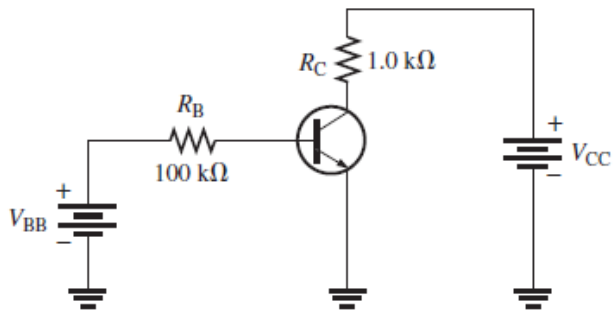
Sol 6	.....

Q7	If V_{CC} is increased to 15 V in Figure 4–53, how much do the currents and V_{CE} change? GURE 4–53 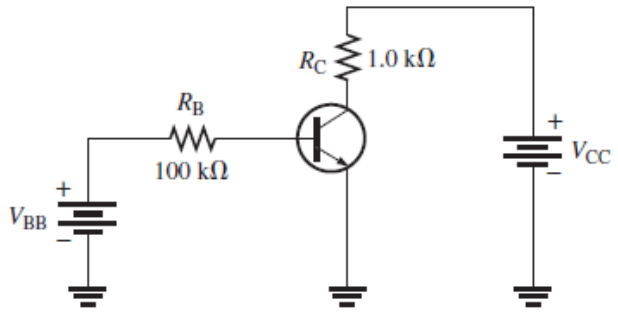
Sol 7	5.3 V increase

Q8	Determine each current in Figure 4–54. What is the β_{DC}? 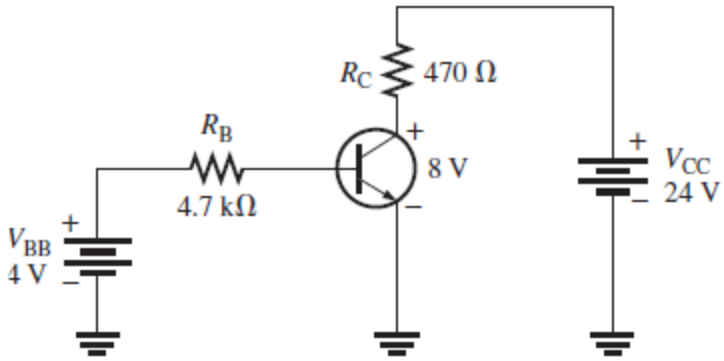
Sol 8	.....