Electronic Circuits – Assignment 05

Special Purpose Diodes

#	Student ID	Student Name	Grade (10)
-			

Delivery Date	

1. يتم تسليم التمرين محلولا في خلال أسبوع من تاريخ التمرين، و يتم حذف درجتين من التمرين عن كل أسبوع تأخير
2. يتم التسليم لمعيد المقرر مباشرة
3. تتم أجابه التمرين في نفس ورق الأسئلة

T & F

#	Question	
1	The zener diode normally operates in reverse breakdown.	T
2	There is no current when a zener is in reverse breakdown.	F
3	The varactor diode is used as a variable capacitor.	T
4	The LED is based on the process of electroluminescence.	T
5	OLED stands for operational light-emitting diode.	F
6	The reverse current of a photodiode increases as the incident light increases.	T

MCQ

#	Question	
1	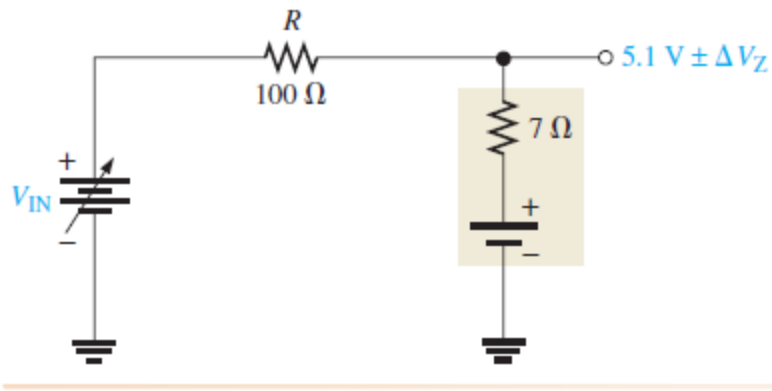 If the input voltage in Figure is increased from 5 V to 10 V, ideally the output voltage will **(a)** increase **(b)** decrease **(c)** not change	c
2	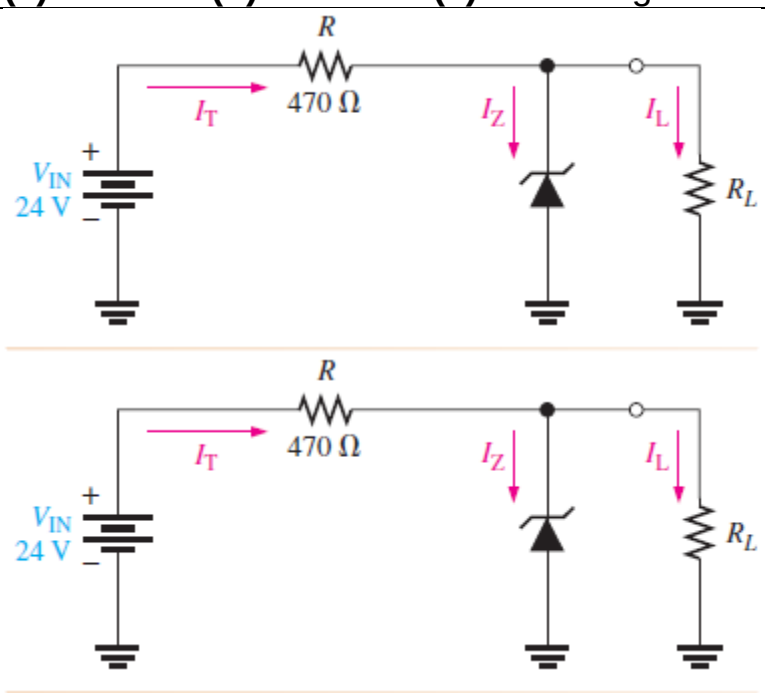 If *RL* in Figure is removed, the current through the zener diode will **(a)** increase **(b)** decrease **(c)** not change	a

3	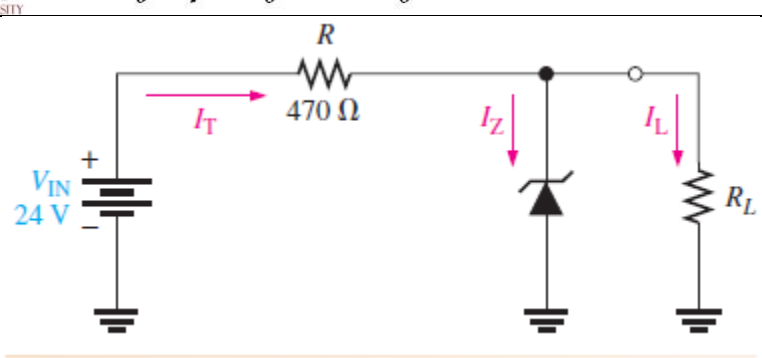 If *R* in Figure is increased, the current to the load resistor will **(a)** increase **(b)** decrease **(c)** not change	b
4	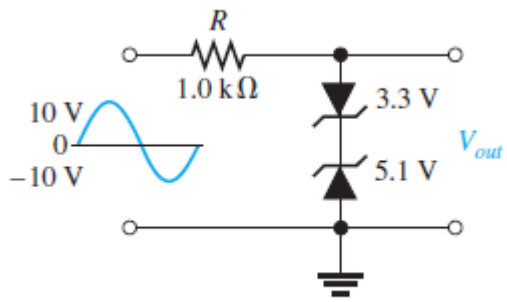 (a) If the input voltage amplitude in Figure is reduced, the amplitude of the output voltage will **(a)** increase **(b)** decrease **(c)** not change	c
5	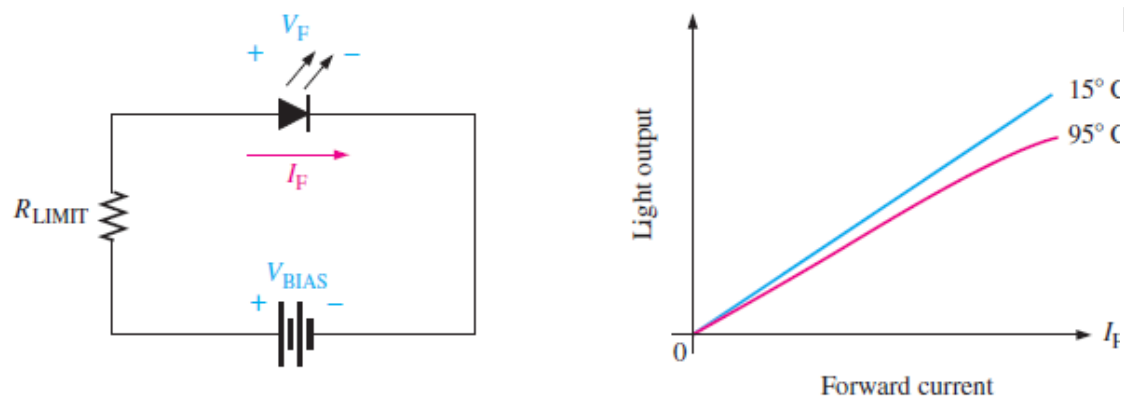 (a) Forward-biased operation (b) General light output versus forward curren for two temperatures If the bias voltage in Figure 3–30 is reversed, the light output of the LED will **(a)** increase **(b)** decrease **(c)** not change **(b)**	b
6	A varactor diode exhibits	a

	(a) a variable capacitance that depends on reverse voltage **(b)** a variable resistance that depends on reverse voltage **(c)** a variable capacitance that depends on forward current **(d)** a constant capacitance over a range of reverse voltages	
7	Compared to a visible red LED, an infrared LED **(a)** produces light with shorter wavelengths **(b)** produces light of all wavelengths **(c)** produces only one color of light **(d)** produces light with longer wavelengths	d
8	An OLED differs from a conventional LED in that it **(a)** requires no bias voltage **(b)** has layers of organic material in the place of a *pn* junction **(c)** can be implemented using an inkjet printing process **(d)** both (b) and (c)	d
9	The internal resistance of a photodiode **(a)** increases with light intensity when reverse-biased **(b)** decreases with light intensity when reverse-biased **(c)** increases with light intensity when forward-biased **(d)** decreases with light intensity when forward-biased	b
10	A diode that has a negative resistance characteristic is the **(a)** Schottky diode **(b)** tunnel diode **(c)** laser diode **(d)** hot-carrier diode	b

Problems:

1	From the characteristic curve in Figure 3–67, what is the approximate minimum zener current (I_{ZK}) and the approximate zener voltage at I_{ZK}? 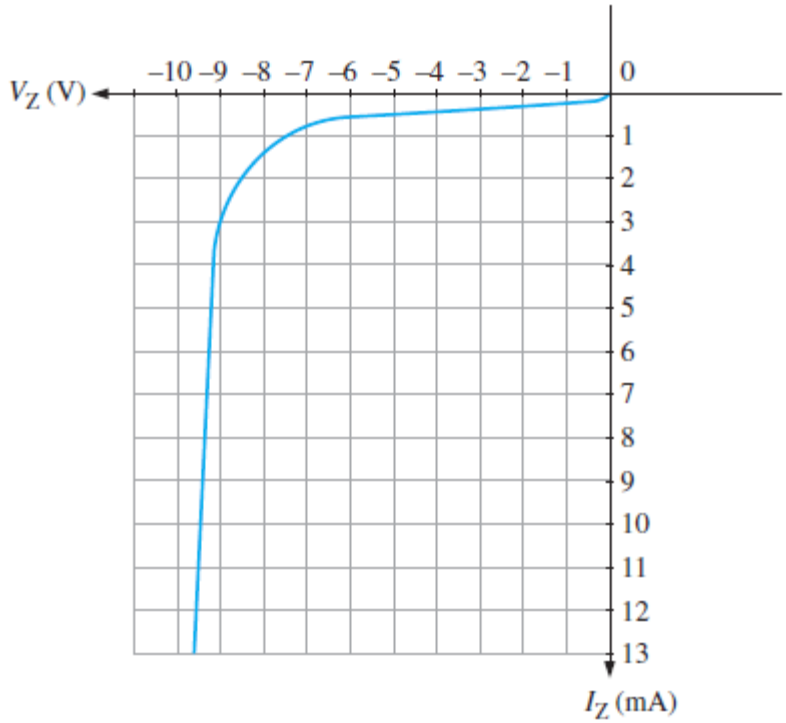
	…… …… …… …… …… …… …… …… …… …… …… ……

2	A zener has an impedance of 15 Ω. What is its terminal voltage at 50 mA if $V_Z = 4.7$ V at $I_Z = 25$ mA?
	.....

Determine the minimum input voltage required for regulation to be established in Figure 3–68. Assume an ideal zener diode with $I_{ZK} = 1.5$ mA and $V_Z = 14$ V.

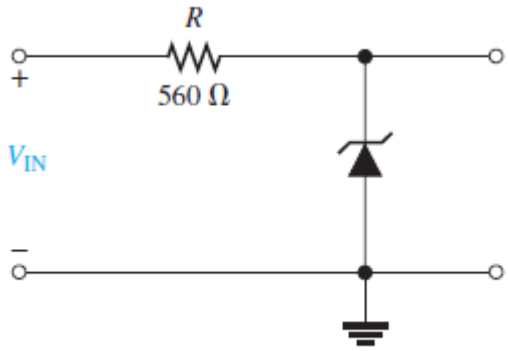

3 To what value must R be adjusted in Figure 3–69 to make $I_Z = 40$ mA? Assume $V_Z = 12$ V at 30 mA and $Z_Z = 30\ \Omega$.

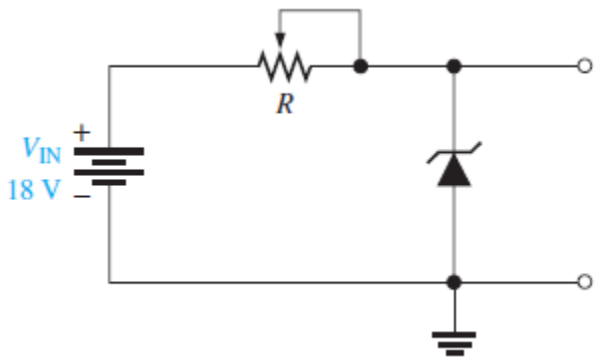

4

A loaded zener regulator is shown in Figure 3–70. $V_Z = 5.1$ V at $I_Z = 49$ mA, $I_{ZK} = 1$ mA, $Z_Z = 7\ \Omega$, and $I_{ZM} = 70$ mA. Determine the minimum and maximum permissible load currents.

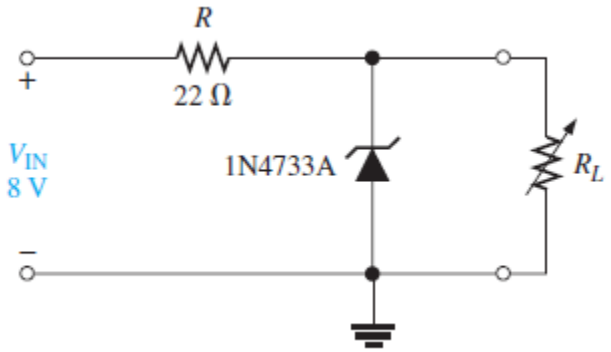

5 Analyze the circuit in Figure 3–70 for percent line regulation using an input voltage from 6 V to 12 V with no load. Refer to Chapter 2, Equation 2–14.

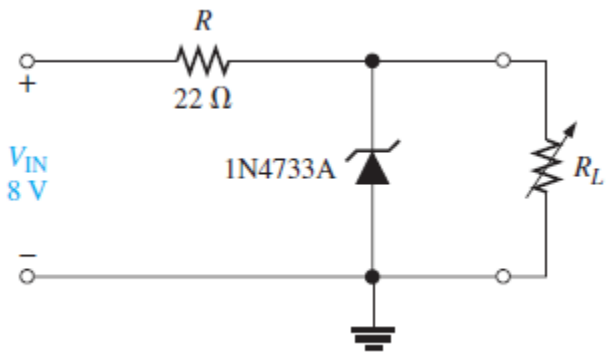

6	In a certain zener regulator, the output voltage changes 0.2 V when the input voltage goes from 5 V to 10 V. What is the input regulation expressed as a percentage? Refer to Chapter 2, Equation 2–14.
	.....

7 The LED in Figure 3–73(a) has a light-producing characteristic as shown in part (b). Neglecting the forward voltage drop of the LED, determine the amount of radiant (light) power produced in mW.

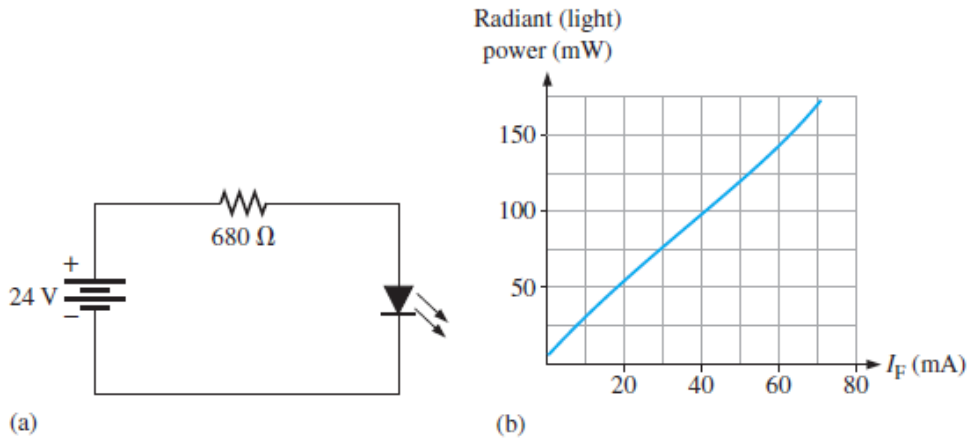

8 Determine how to connect the seven-segment display in Figure 3–74 to display "5." The maximum continuous forward current for each LED is 30 mA and a +5 V dc source is to be used.

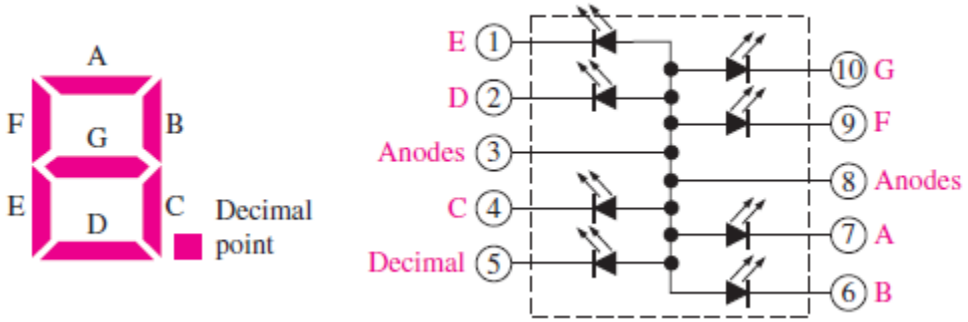

See Figure ANS–9.

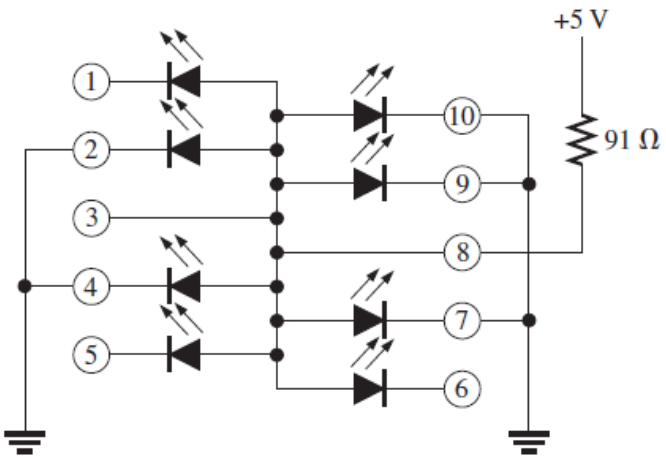

9	Specify the number of limiting resistors and their value for a series-parallel array of 48 red LEDs using a 9 V dc source for a forward current of 20 mA.
	.....

10	Develop a yellow LED traffic-light array using a minimum number of limiting resistors that operates from a 24 V supply and consists of 100 LEDs with $I_F = 30$ mA and an equal number of LEDs in each parallel branch. Show the circuit and the resistor values.

23. See Figure ANS–10.

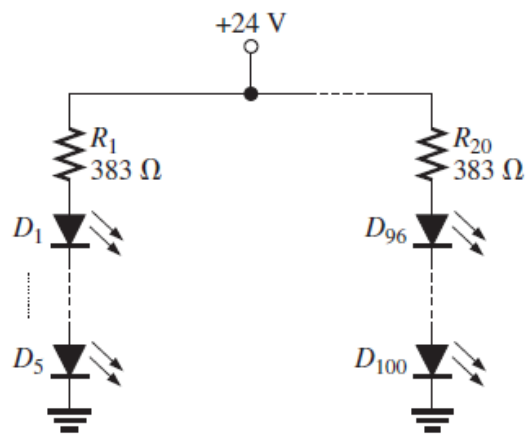

11	For a certain photodiode at a given irradiance, the reverse resistance is 200 kΩ and the reverse voltage is 10 V. What is the current through the device?
	.....

12

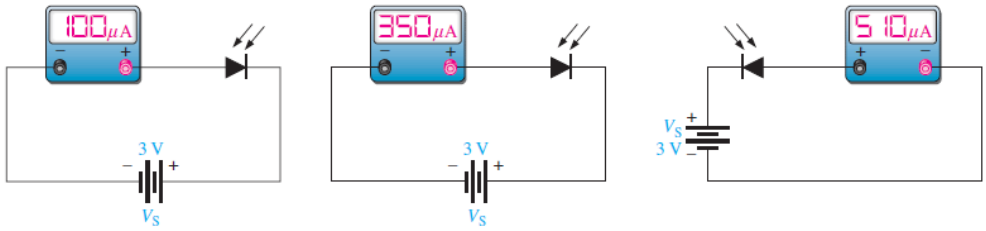

What is the resistance of each photodiode in Figure 3–75?

(a) 30 kΩ (b) 8.57 kΩ (c) 5.88 kΩ

13	When the switch in Figure 3–76 is closed, will the microammeter reading increase or decrease? Assume D_1 and D_2 are optically coupled. 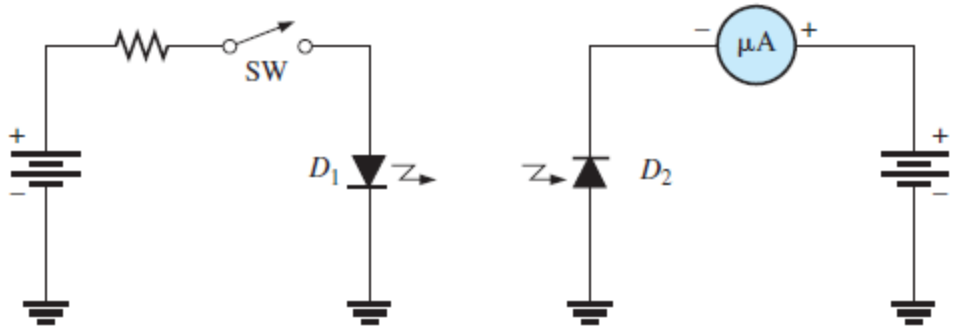
	.....