Electronic Circuits – Assignment 04

Diodes applications 3,

#	Student ID	Student Name	Grade (10)
-			

Delivery Date	

1. يتم تسليم التمرين محلولا في خلال أسبوع من تاريخ التمرين، و يتم حذف درجتين من التمرين عن كل أسبوع تأخير
2. يتم التسليم لمعيد المقرر مباشرة
3. تتم أجابه التمرين في نفس ورق الأسئلة

Questions 1

Q1	Determine the voltage across each diode in Figure, assuming the practical model. 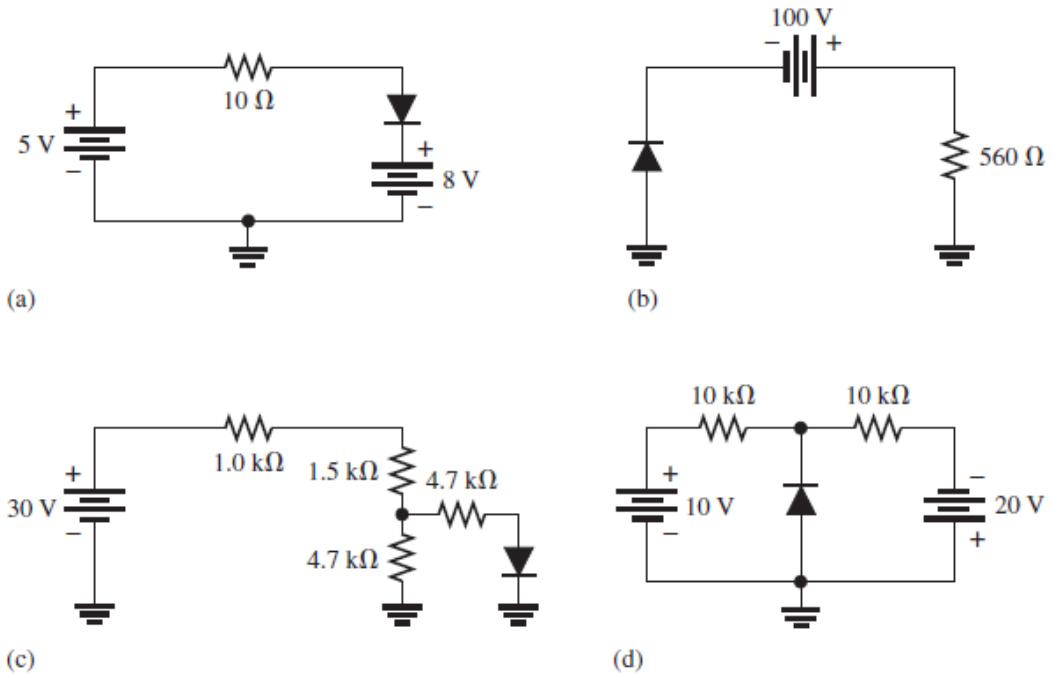
Sol 1	.....

Q2	Determine the voltage across each diode in Figure, using the complete diode model with $r_d = 10\ \Omega$ and $r_R = 100\ \text{M}\Omega$. 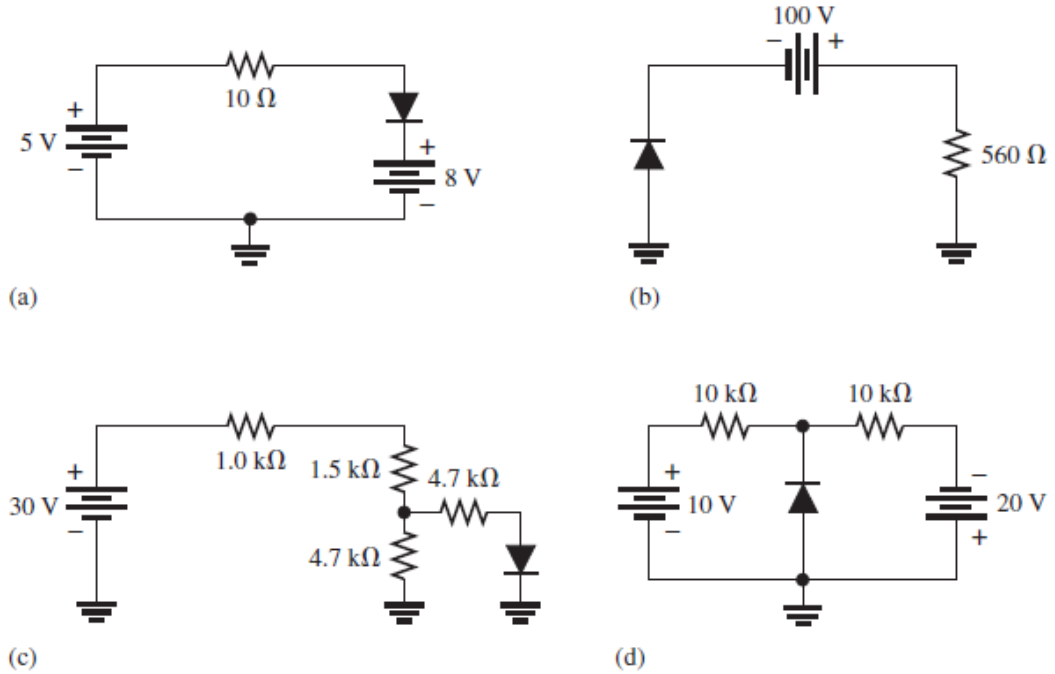
Sol 2	…… …… …… …… …… …… …… …… …… …… …… ……

T & F 1

#		
1	A bridge rectifier uses four diodes.	T
2	The purpose of the capacitor filter in a rectifier is to convert ac to dc.	F
3	A smaller filter capacitor reduces the ripple.	F
4	A diode limiter is also known as a clipper.	T
5	Voltage multipliers use diodes and capacitors.	T

MCQ 1

#	Question	
1	If one of the diodes in Figure opens, the average voltage to the load will 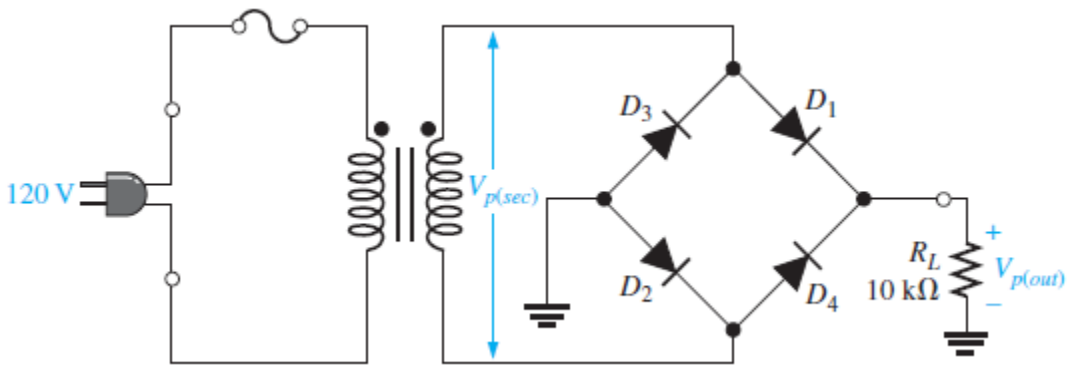 **(a)** increase **(b)** decrease **(c)** not change	b
2	If the capacitor value in Figure is decreased, the output ripple voltage will 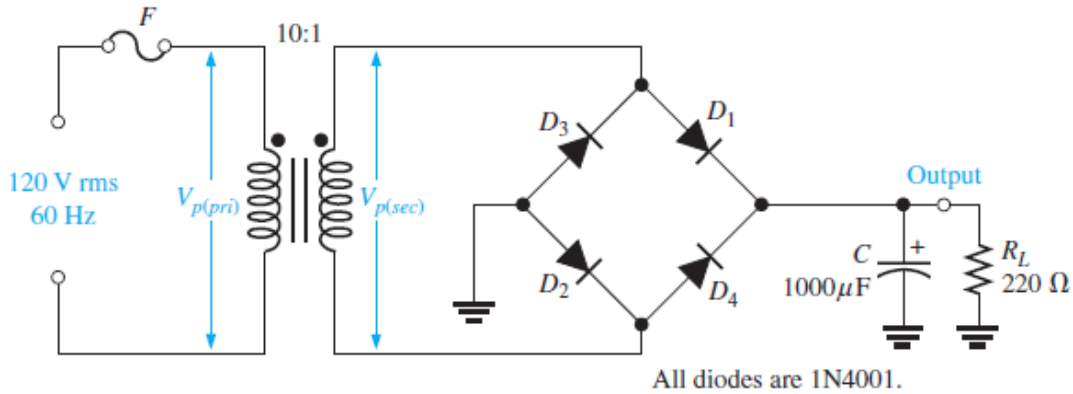 **(a)** increase **(b)** decrease **(c)** not change	a

3	If the bias voltage in Figure is decreased, the positive portion of the output voltage will 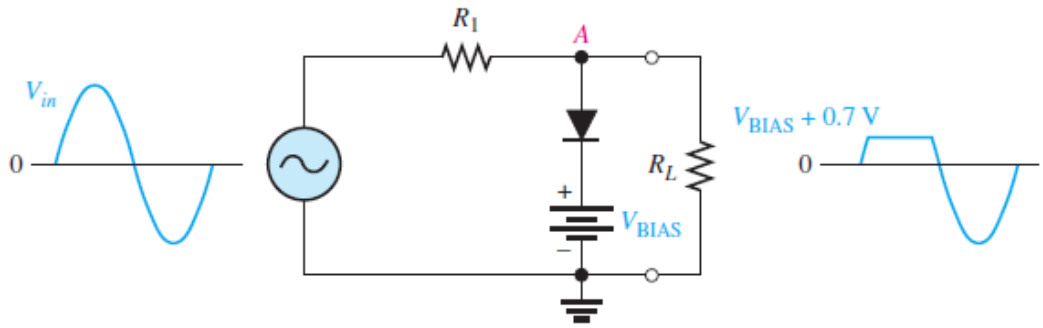 **(a)** increase **(b)** decrease **(c)** not change	b
4	If the value of *R*3 in Figure is decreased, the positive output voltage will 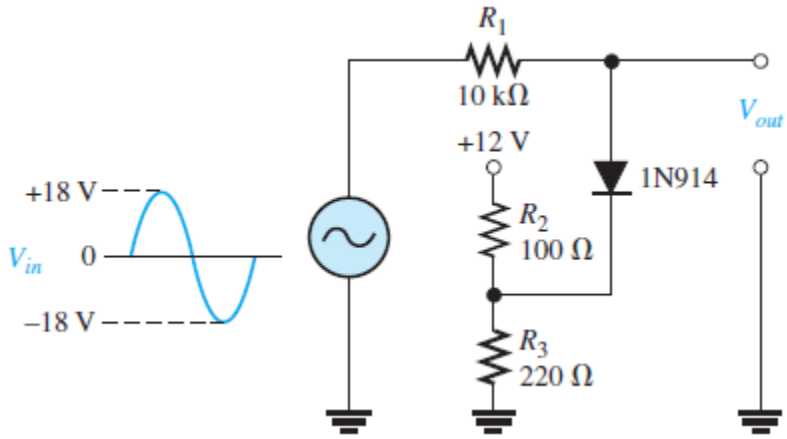 **(a)** increase **(b)** decrease **(c)** not change	b
5	The ideal dc output voltage of a capacitor-input filter is equal to **(a)** the peak value of the rectified voltage **(b)** the average value of the rectified voltage **(c)** the rms value of the rectified voltage	a
6	A 60 V peak full-wave rectified voltage is applied to a capacitor-input filter. If *f* = 120 Hz, *RL* = 10 k , and *C* = 10 F, the ripple voltage is **(a)** 0.6 V **(b)** 6 mV **(c)** 5.0 V **(d)** 2.88 V	c

7	Line regulation is determined by **(a)** load current **(b)** zener current and load current **(c)** changes in load resistance and output voltage **(d)** changes in output voltage and input voltage	d
8	A 10 V peak-to-peak sinusoidal voltage is applied across a silicon diode and series resistor. The maximum voltage across the diode is **(a)** 9.3 V **(b)** 5 V **(c)** 0.7 V **(d)** 10 V **(e)** 4.3 V	d
9	In a certain positive clamper circuit, a 120 V rms sine wave is applied to the input. The dc value of the output is **(a)** 119.3 V **(b)** 169 V **(c)** 60 V **(d)** 75.6 V	b
10	If the input voltage to a voltage tripler has an rms value of 12 V, the dc output voltage is approximately **(a)** 36 V **(b)** 50.9 V **(c)** 33.9 V **(d)** 32.4 V	b
11	When a silicon diode is open, a DMM will generally indicate **(a)** 0 V **(b)** OL **(c)** approximately 0.7 V **(d)** approximately 0.3 V	b
12	If one of the diodes in a bridge full-wave rectifier opens, the output is **(a)** 0 V **(b)** one-fourth the amplitude of the input voltage **(c)** a half-wave rectified voltage **(d)** a 120 Hz voltage	c

Problems 2

1	The rms output voltage of a bridge rectifier is 20 V. What is the peak inverse voltage across the diodes? 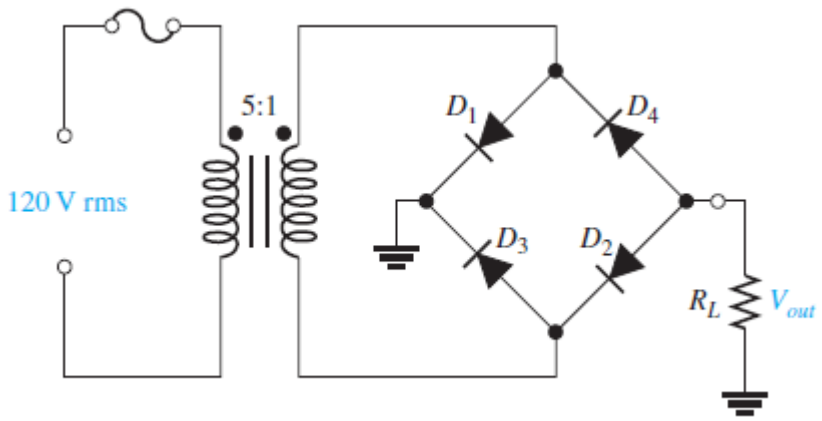
1	…… …… …… …… …… …… …… …… …… …… …… …… …… …… …… …… ……

2	A certain rectifier filter produces a dc output voltage of 75 V with a peak-to-peak ripple voltage of 0.5 V. Calculate the ripple factor.
2	…… ……

3	A certain full-wave rectifier has a peak output voltage of 30 V. A 50 F capacitor-input filter is connected to the rectifier . What is the percentage of ripple for the rectifier filter
3	………………………………………………………………………………

4	A full-wave rectifier produces an 80 V peak rectified voltage from a 60 Hz ac source. If a 10 μF filter capacitor is used, determine the ripple factor for a load resistance of 10 kΩ.
4	.....

5	Refer to Figure 2–98 and draw the following voltage waveforms in relationship to the input waveforms: V_{AB}, V_{AD}, and V_{CD}. A double letter subscript indicates a voltage from one point to another. 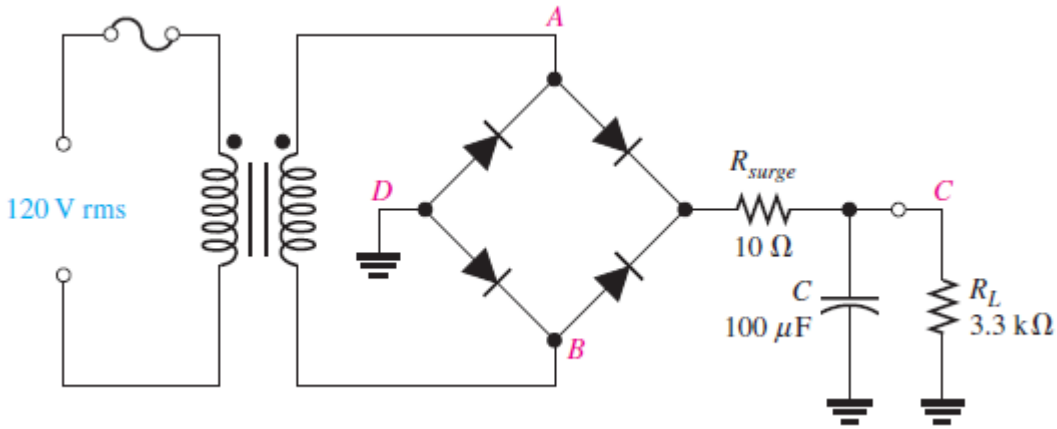
5	.....

6	Assume a regulator has a percent load regulation of 0.5%. What is the output voltage at full-load if the unloaded output is 12.0 V?
6	.....

7 Determine the output voltage for the circuit in Figure 2–100(a) for each input voltage in (b), (c), and (d).

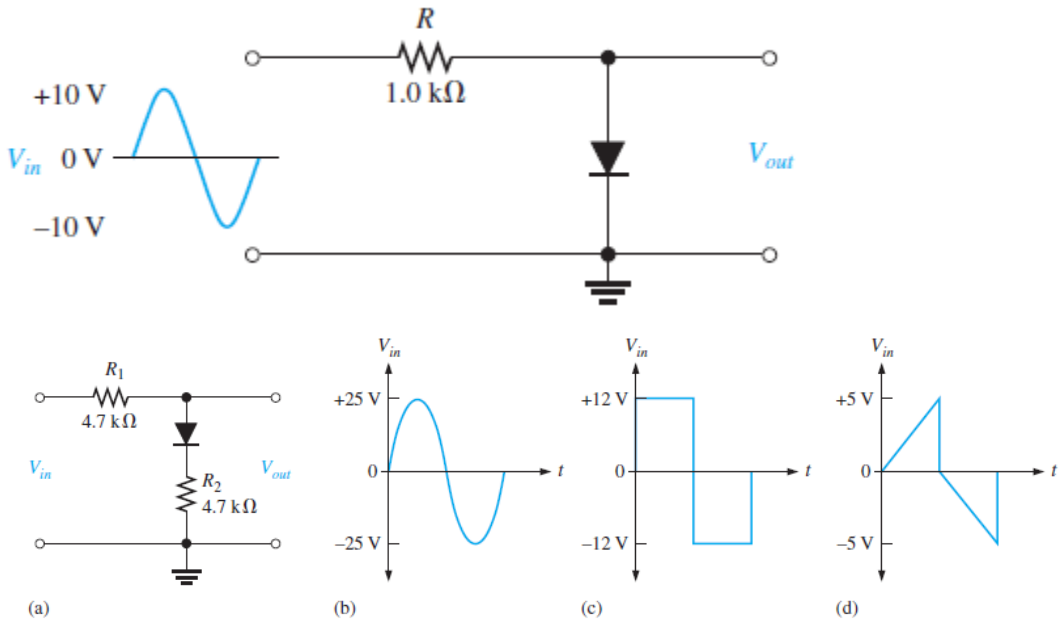

7 .....

.....

.....

.....

.....

.....

.....

.....

.....

.....

.....

.....

.....

.....

8 Determine the R_L voltage waveform for each circuit in Figure 2–102.

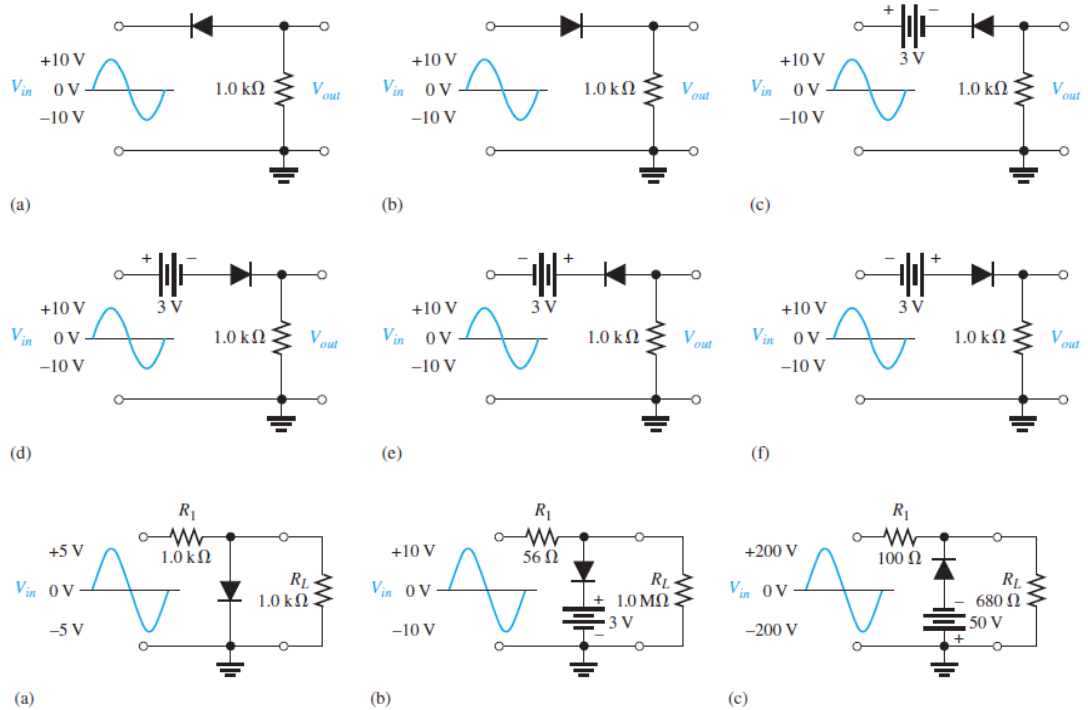

8 .....

.....

.....

.....

.....

.....

.....

.....

.....

.....

.....

.....

.....

9	Determine the peak forward current through each diode in Figure 2–103. 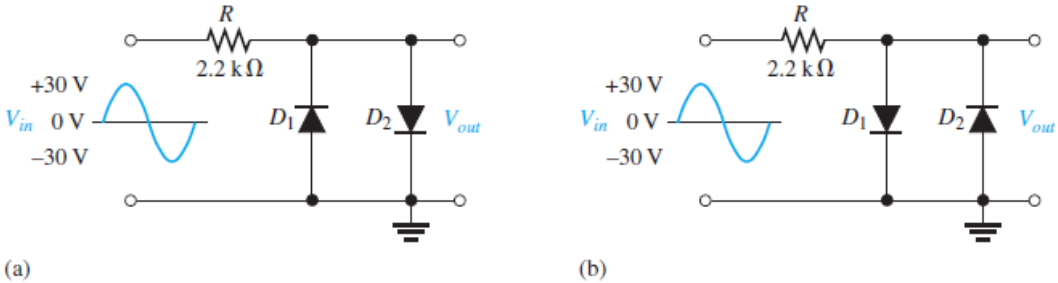
9	.....

10	Determine the output voltage waveform for each circuit in Figure 2–104. 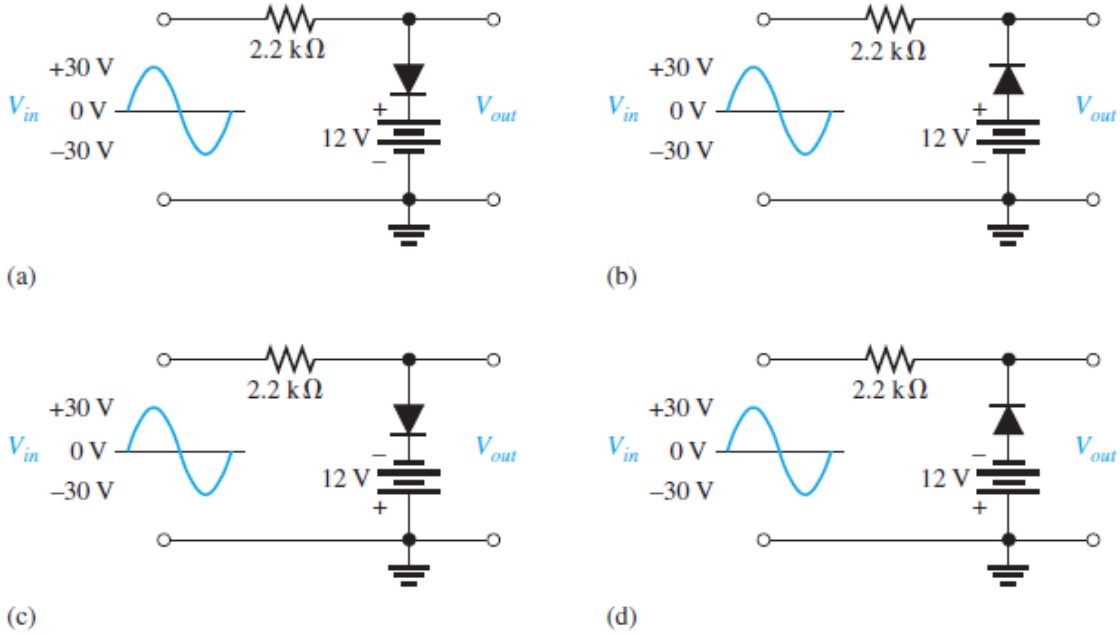
10	.....

11 Describe the output waveform of each circuit in Figure 2–105. Assume the *RC* time constant is much greater than the period of the input.

with the diodes turned around.

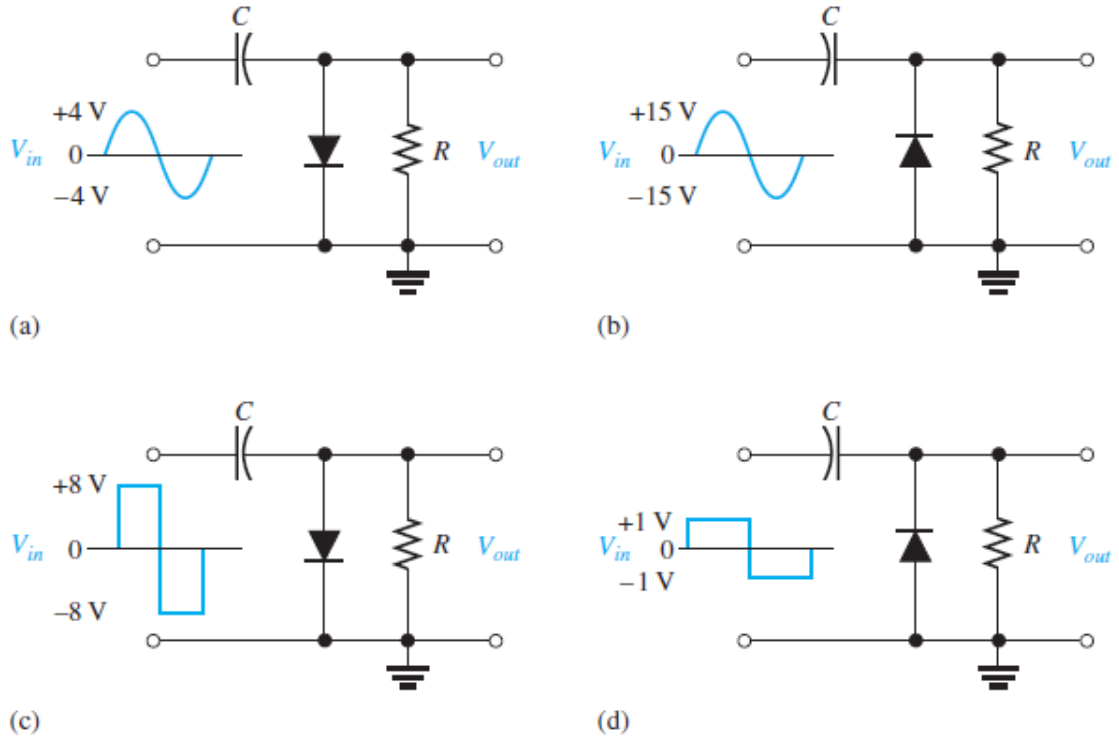

11 .....

.....

.....

.....

.....

.....

.....

.....

.....

.....

.....

.....

12	A certain voltage tripler and quadrupler has 20 V rms on its input. What is the output voltage? Draw the circuit, indicating the output terminals and PIV rating for the diode.
12	…………………………………………………………………………………… ……………………………………………………………………………………