Electronic Circuits – Assignment 03

Diode Applications I

#	Student ID	Student Name	Grade (10)
-			

Delivery Date	

1. يتم تسليم التمرين محلولا في خلال أسبوع من تاريخ التمرين، و يتم حذف درجتين من التمرين عن كل أسبوع تأخير
2. يتم التسليم لمعيد المقرر مباشرة
3. تتم أجابه التمرين في نفس ورق الأسئلة

T & False questions

#	Question	Answer
1	The two regions of a diode are the anode and the collector.	
2	A diode conducts current when forward-biased.	
3	Two types of current in a diode are electron and hole.	
4	The output frequency of a half-wave rectifier is twice the input frequency.	
5	PIV stands for positive inverse voltage.	

MCQ

#	Question	
1	When a diode is forward-biased and the bias voltage is increased, the voltage across the diode (assuming the practical model) will **(a)** increase **(b)** decrease **(c)** not change	
2	When a diode is reverse-biased and the bias voltage is increased, the reverse current (assuming the complete model) will **(a)** increase **(b)** decrease **(c)** not change	
3	If the forward current in a diode is increased, the diode voltage (assuming the practical model) will **(a)** increase **(b)** decrease **(c)** not change	
4	If the barrier potential of a diode is exceeded, the forward current will **(a)** increase **(b)** decrease **(c)** not change	
5	If the turns ratio of the transformer in Figure 2–28 is decreased, the forward current through the diode will 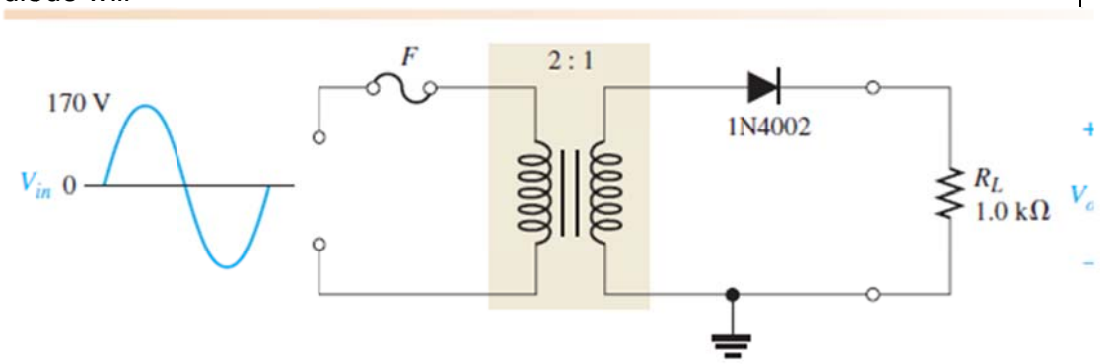 **(a)** increase **(b)** decrease **(c)** not change	

Problems

Problem 1	Determine the peak output voltages for the rectifiers in Figure 2–24 if the peak input in part (a) is 3 V and the peak input in part (b) is 50 V. 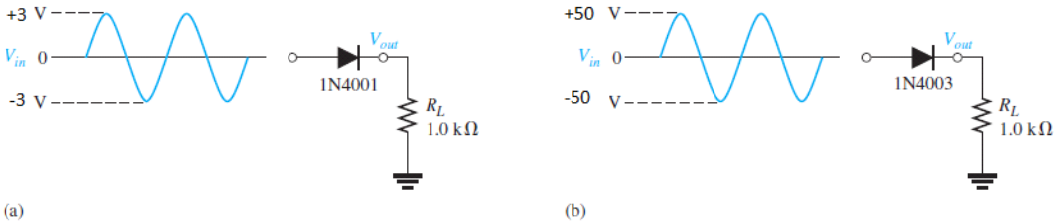
Answer 1	…… …… …… …… …… …… …… …… …… …… …… …… …… …… …… …… ……

Q2	What is the peak inverse voltage across each diode in Figure? 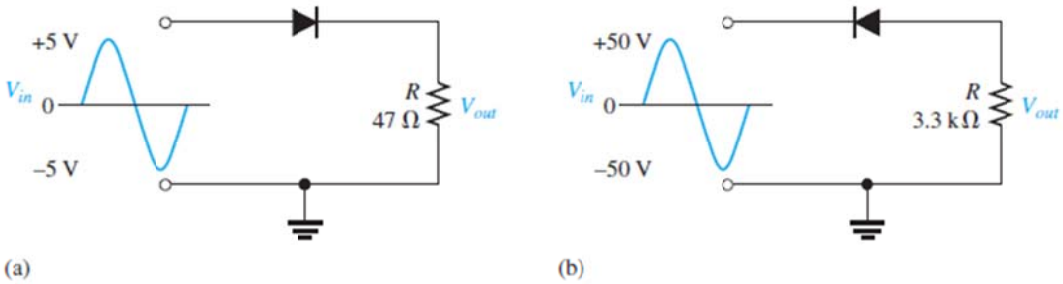
Sol 2	.....

Q3	What is the peak forward current through each diode in Figure 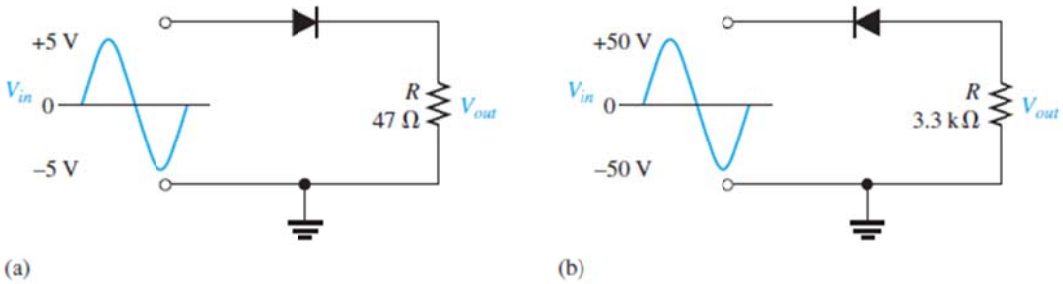
Sol 3	.....

Q4	Determine the peak and average power delivered to *RL* in Figure 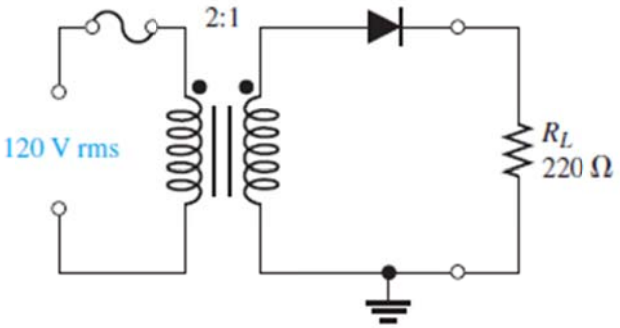
Sol 4	.....