Electronic Circuits II - Assignment 01

T & F

1	DC bias establishes the dc operating point for an amplifier.	
2	Q-point is the quadratic point in a bias circuit.	
3	The dc load line intersects the horizontal axis of a transistor characteristic curve at VCE = VCC.	
4	The dc load line intersects the vertical axis of a transistor characteristic curve at IC = 0.	

MCQ

#	Question	
1	If the value of R1 in Figure is increased, the emitter current will 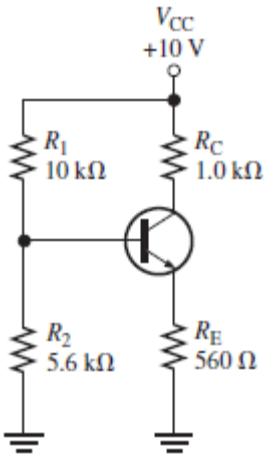 (a) increase (b) decrease (c) not change	

2	If RE in Figure is decreased, the collector current will 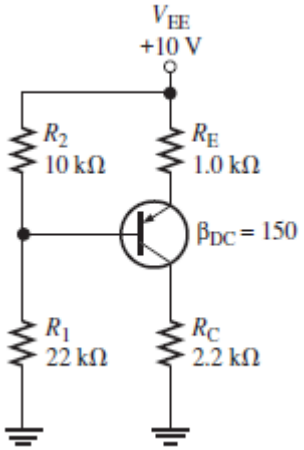 (a) increase (b) decrease (c) not change	
3	Ideally, a dc load line is a straight line drawn on the collector characteristic curves between (a) the Q-point and cutoff (b) the Q-point and saturation (c) $V_{CE(cutoff)}$ and $I_{C(sat)}$ (d) $I_B = 0$ and $I_B = I_C/\beta_{DC}$	
4	The input resistance at the base of a biased transistor depends mainly on (a) β_{DC} (b) R_B (c) R_E (d) β_{DC} and R_E	
5	In a certain voltage-divider biased *npn* transistor, V_B is 2.95 V. The dc emitter voltage is approximately (a) 2.25 V (b) 2.95 V (c) 3.65 V (d) 0.7 V	

Problems

Q1

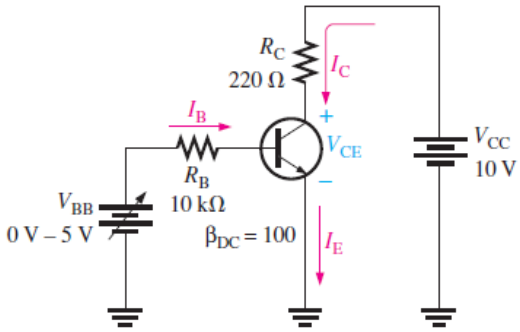

(a) DC biased circuit

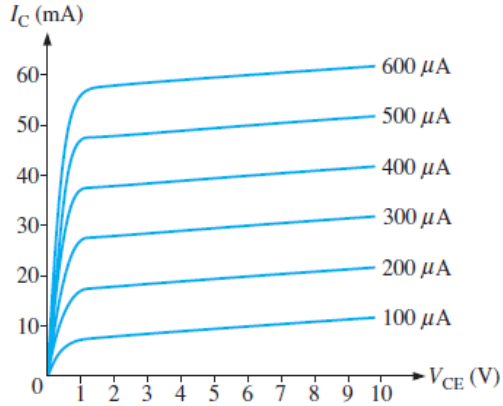

(b) Collector characteristic curves

What is the Q-point for a biased transistor as in Figure with $I_B = 150\ \mu A$, $\beta_{DC} = 75$, $V_{CC} = 18$ V, and $R_C = 1.0\ k\Omega$?

What is the saturation value of collector current ?

What is the cutoff value of V_{CE}

Sol 1

.....

.....

.....

.....

.....

.....

.....

.....

.....

.....

.....

.....

.....

.....

.....

Q2

▶ FIGURE

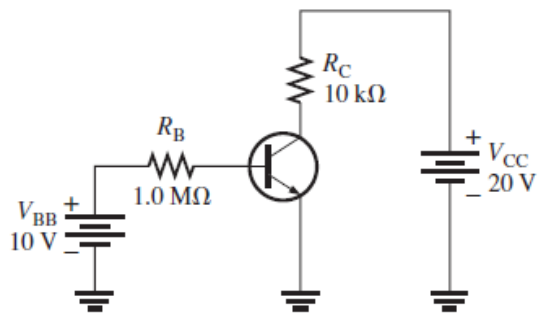

Assume that you wish to bias the transistor in Figure with $I_B = 20\ \mu A$. To what voltage must you change the V_{BB} supply? What are I_C and V_{CE} at the Q-point, given that $\beta_{DC} = 50$?

Sol 2

Q3	Determine whether the transistor in Figure is biased in cutoff, saturation, or the linear region. Remember that $I_C = \beta_{DC} I_B$ is valid only in the linear region. ▶ FIGURE 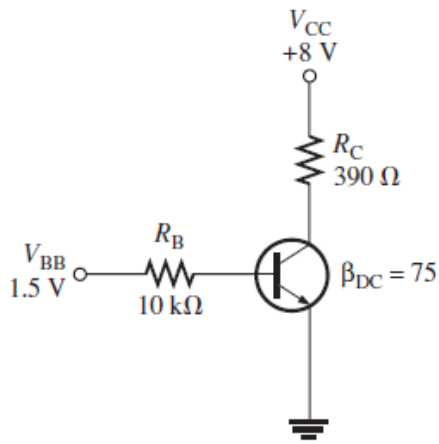
Sol 3	.....

Q4

▶ FIGURE

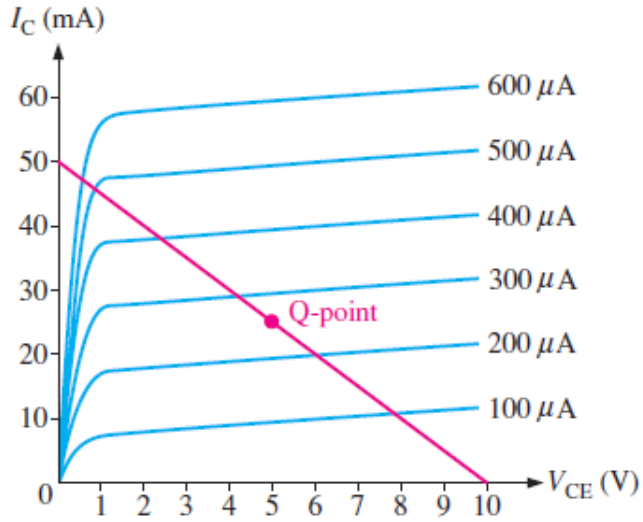

From Figure determine the following:

(a) Maximum collector current for linear operation

(b) Base current at the maximum collector current

(c) V_{CE} at maximum collector current

Sol 4

.....

.....

.....

.....

.....

.....

.....

.....

.....

.....

.....

.....

.....

.....

Q5	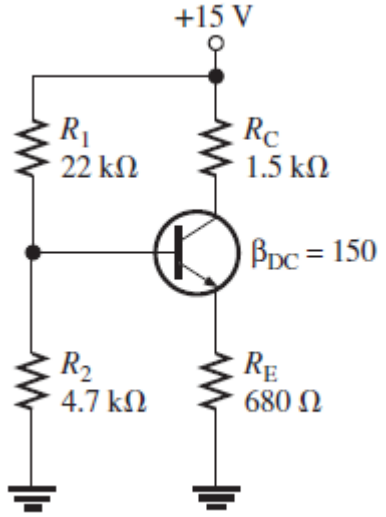 The bias resistor R_2 in Figure is replaced by a 15 kΩ potentiometer. What minimum resistance setting causes saturation?
Sol 5	.....

	…… …… ……

Q6	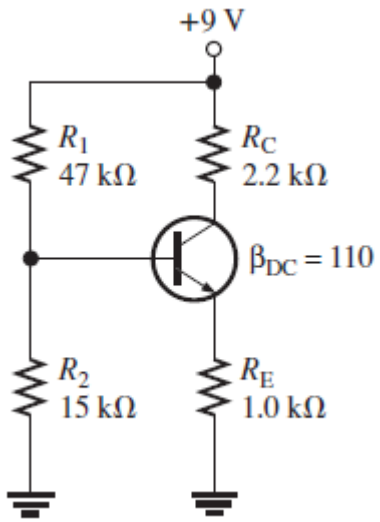 Determine all transistor terminal voltages with respect to ground in Figure
Sol 6	…… …… …… …… …… …… …… …… …… …… …… …… …… …… …… …… …… ……

Q7

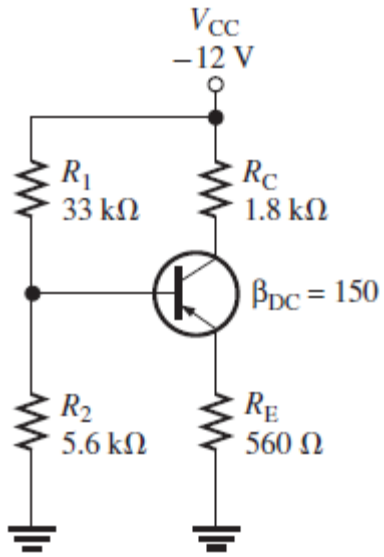

(a) Determine V_B in Figure

(b) How is V_B affected if the transistor is replaced by one with a β_{DC} of 50?

Sol 7

.....

.....

.....

.....

.....

.....

.....

.....

.....

.....

.....

.....

.....