Electronic Circuits - Tutorial 08

BJT transistor 2

T & F

#	Question	
1	cutoff and saturation are the two normal states of a linear transistor amplifier.	F
2	When a transistor is saturated, the collector current is maximum.	T
3	Voltage gain of a transistor amplifier depends on the collector resistor and the internal acresistance.	T
4	A transistor in cutoff acts as an open switch.	T

MCQ

#	Question	
1	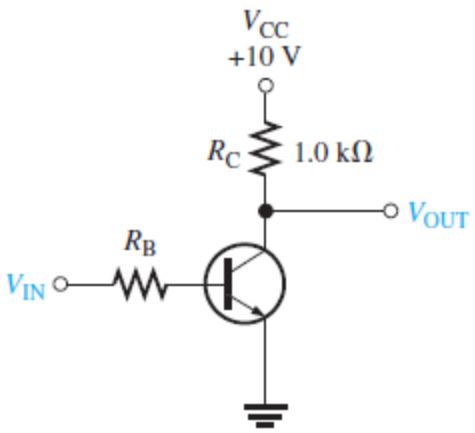 If the transistor in Figure is saturated and the base current is increased, the collector current will **(a)** increase **(b)** decrease **(c)** not change	c
2	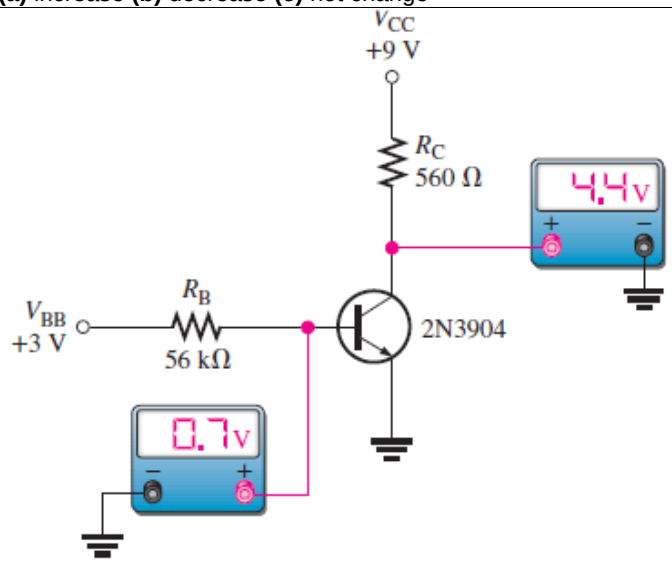 If the transistor in Figure is open from collector to emitter, the voltage across *R*c will **(a)** increase **(b)** decrease **(c)** not change	b

3	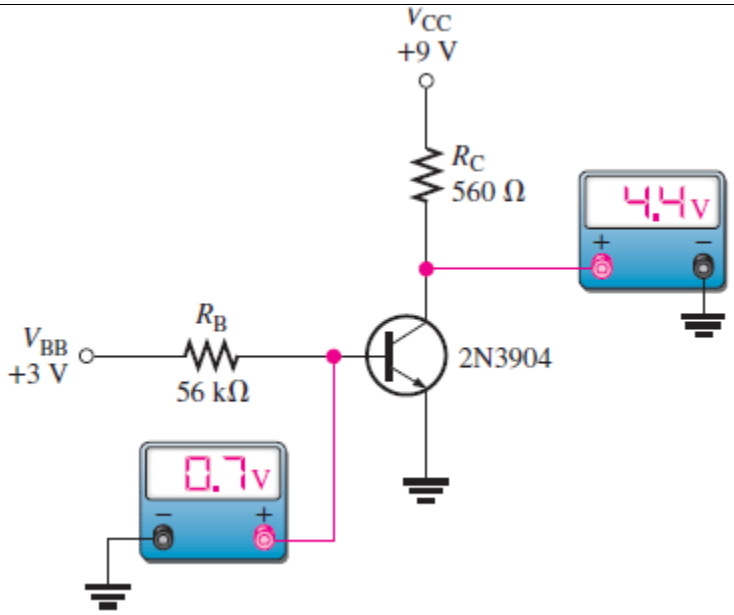 If the base resistor in Figure is open, the transistor collector voltage will **(a)** increase **(b)** decrease **(c)** not change	a
4	In a given transistor amplifier, $R_C = 2.2\ \text{k}\Omega$ and $r'_e = 20\ \Omega$, the voltage gain is **(a)** 2.2 **(b)** 110 **(c)** 20 **(d)** 44	b
5	In cutoff, V_{CE} is **(a)** 0 V **(b)** minimum **(c)** maximum	f
6	To saturate a BJT, **(a)** $I_B = I_{C(sat)}$ **(b)** $I_B > I_{C(sat)}/\beta_{DC}$ **(c)** V_{CC} must be at least 10 V **(d)** the emitter must be grounded	b
7	In a phototransistor, base current is **(a)** set by a bias voltage **(b)** directly proportional to light intensity **(c)** inversely proportional to light intensity **(d)** not a factor	b
8	An optocoupler usually consists of **(a)** two LEDs **(b)** an LED and a photodiode **(c)** an LED and a phototransistor **(d)** both (b) and (c)	d
9	A DMM measuring on open transistor junction shows **(a)** 0 V **(b)** 0.7 V **(c)** OL **(d)** V_{CC}	c

10	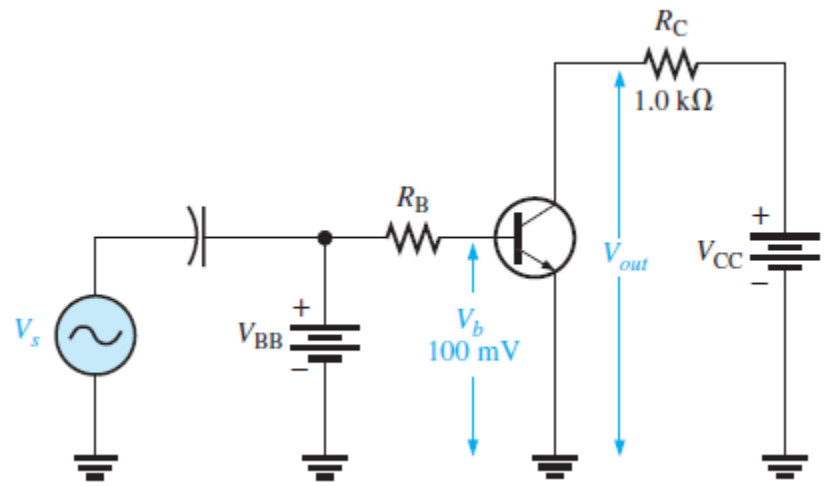 If the amplitude of V_{in} in Figure is decreased, the ac output voltage amplitude will **(a)** increase **(b)** decrease **(c)** not change	b
11	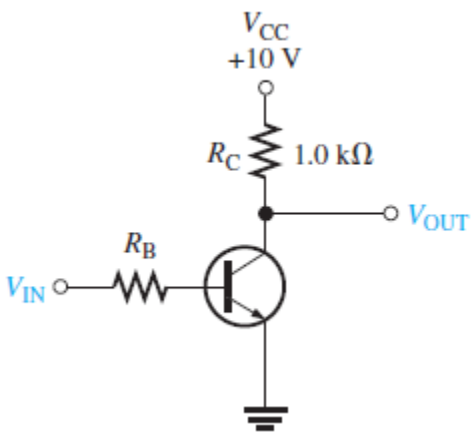 R_C in Figure is reduced in value, the value of $I_{C(sat)}$ will **(a)** increase **(b)** decrease **(c)** not change	a

12	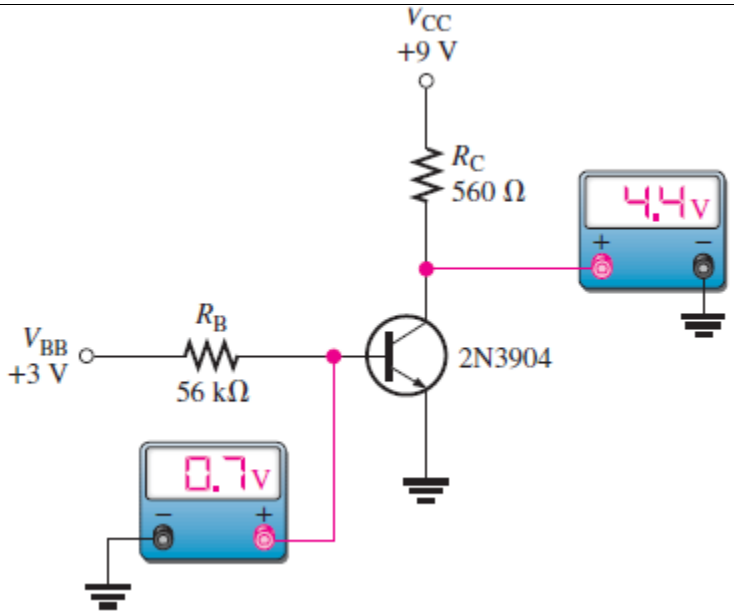 If the transistor in Figure is open from collector to emitter, the collector voltage will **(a)** increase **(b)** decrease **(c)** not change	a
13	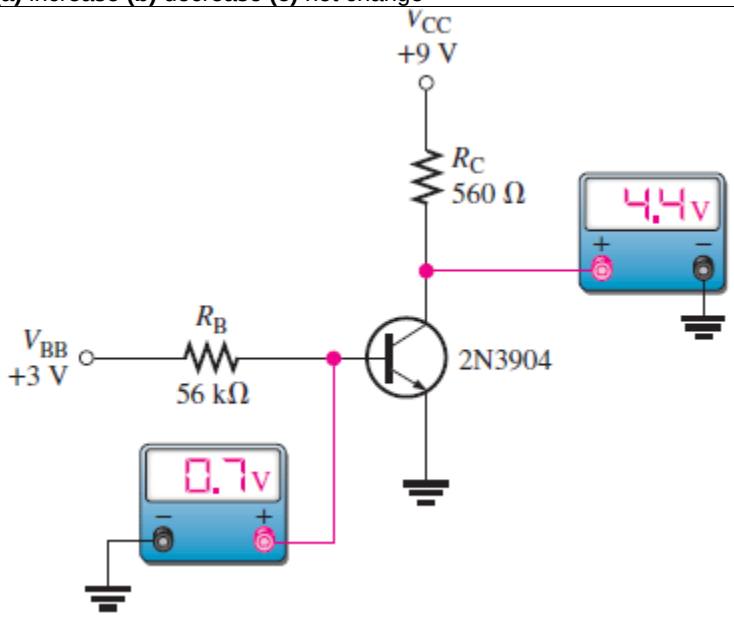 If the emitter in Figure becomes disconnected from ground, the collector voltage will **(a)** increase **(b)** decrease **(c)** not change	a
14	When operated in cutoff and saturation, the transistor acts like a **(a)** linear amplifier **(b)** switch **(c)** variable capacitor **(d)** variable resistor	b
15	In saturation, V_{CE} is **(a)** 0.7 V **(b)** equal to V_{CC} **(c)** minimum **(d)** maximum	c
16	Once in saturation, a further increase in base current will **(a)** cause the collector current to increase **(b)** not affect the collector current **(c)** cause the collector current to decrease **(d)** turn the transistor off	b
17	The relationship between the collector current and a light-generated base current is (a) $I_C = \beta_{DC} I_\lambda$ (b) $I_C = \alpha_{DC} I_\lambda$ (c) $I_C = \lambda I_\lambda$ (d) $I_C = \beta_{DC}^2 I_\lambda$	a

18	In a transistor amplifier, if the base-emitter junction is open, the collector voltage is **(a)** V_{CC} **(b)** 0 V **(c)** floating **(d)** 0.2 V	a

Problems:

Q1	Find V_{CE}, V_{BE}, and V_{CB} in both circuits of Figure 4–55. 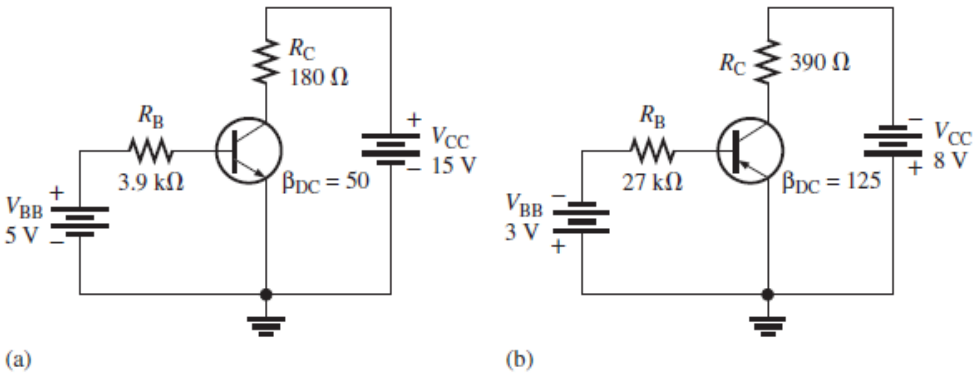
Sol 1	(a) $V_{BE} = 0.7$ V, $V_{CE} = 5.10$ V, $V_{CB} = 4.40$ V (b) $V_{BE} = -0.7$ V, $V_{CE} = -3.83$ V, $V_{CB} = -3.13$ V

Q2	Determine whether or not the transistors in Figure 4–55 are saturated. 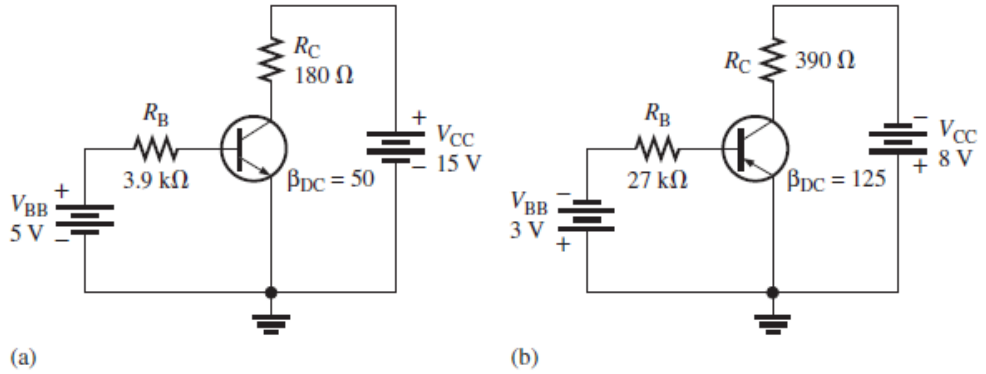
Sol 2	.....

Q3	Find I_B, I_E, and I_C in Figure 4–56. $\alpha_{DC} = 0.98$. 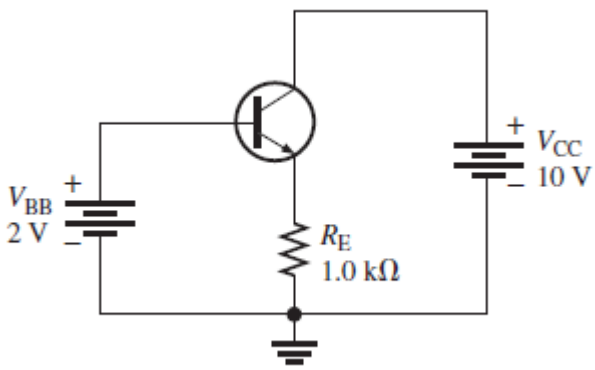
Sol 3	$I_B = 30\ \mu A$, $I_E = 1.3$ mA, $I_C = 1.27$ mA

Q4	Determine the terminal voltages of each transistor with respect to ground for each circuit in Figure 4–57. Also determine V_{CE}, V_{BE}, and V_{CB}. 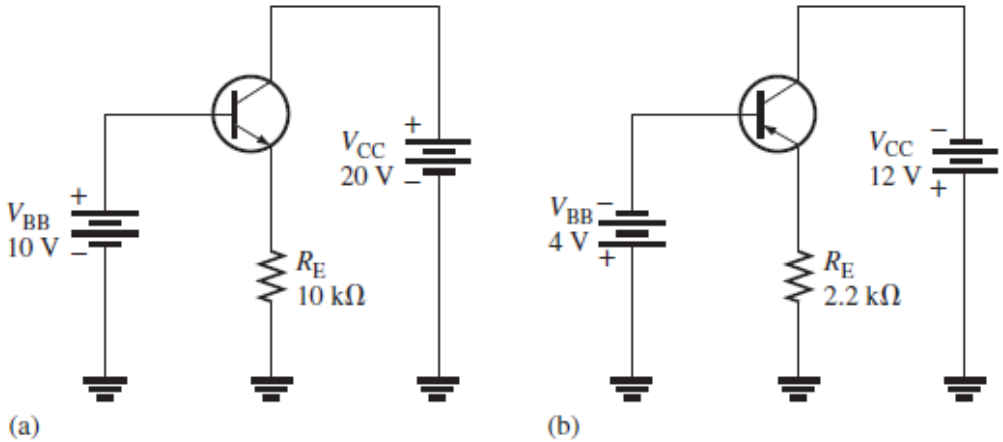
Sol 4	.....

Q5	If the β_{DC} in Figure 4–57(a) changes from 100 to 150 due to a temperature increase, the change in collector current? 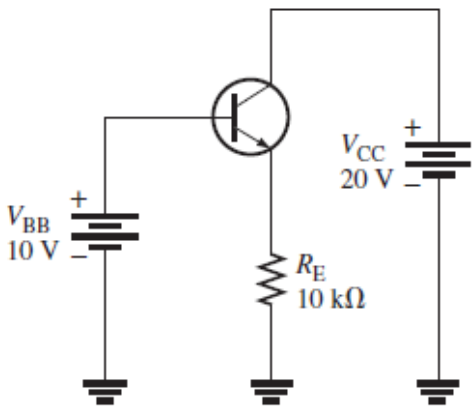 (a)
Sol 5	3 μA

Q6	A certain transistor is to be operated at a collector current of 50 mA. How high can V_{CE} go without exceeding a $P_{D(max)}$ of 1.2 W?
Sol 6	.....

Q7	The power dissipation derating factor for a certain transistor is 1 mW/° C. The $P_{D(max)}$ is 0.5 W at 25° C. What is $P_{D(max)}$ at 100° C?
Sol 7	..... 425 mW .....

Q8	A transistor amplifier has a voltage gain of 50. What is the output voltage when the input voltage is 100 mV?
Sol 8	.....

Q9	To achieve an output of 10 V with an input of 300 mV, what voltage gain is required?
Sol 9	33.3

Q10	A 50 mV signal is applied to the base of a properly biased transistor with $r'_e = 10\ \Omega$ and $R_C = 560\ \Omega$. Determine the signal voltage at the collector.
Sol 10	.....

Q11	Determine the value of the collector resistor in an *npn* transistor amplifier with $\beta_{DC} = 250$, $V_{BB} = 2.5$ V, $V_{CC} = 9$ V, $V_{CE} = 4$ V, and $R_B = 100$ kΩ.
Sol 11	1.1 kΩ

Q12	What is the dc current gain of each circuit in Figure 4–55? 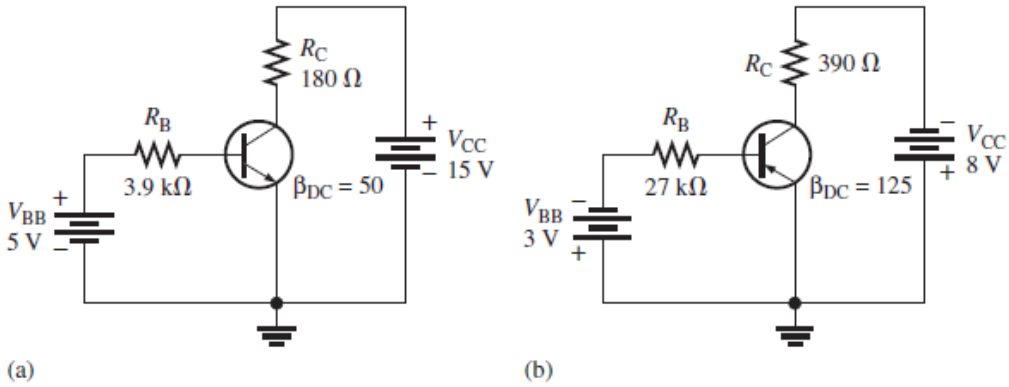
Sol 12	.....

Q13	Determine $I_{C(sat)}$ for the transistor in Figure 4–58. What is the value of I_B necessary to produce saturation? What minimum value of V_{IN} is necessary for saturation? Assume $V_{CE(sat)} = 0$ V. 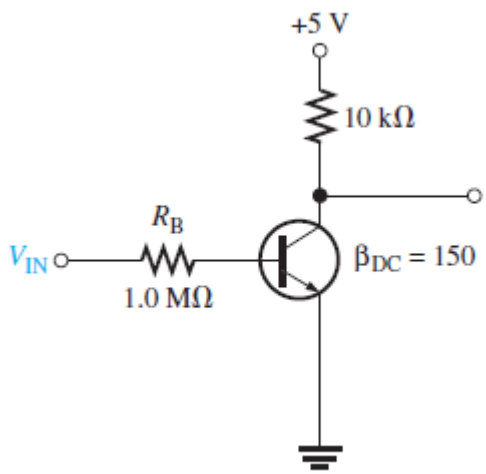
Sol 13	500 μA, 3.33 μA, 4.03 V

Q14	The transistor in Figure 4–59 has a β_{DC} of 50. Determine the value of R_B required to ensure saturation when V_{IN} is 5 V. What must V_{IN} be to cut off the transistor? Assume $V_{CE(sat)} = 0$ V. 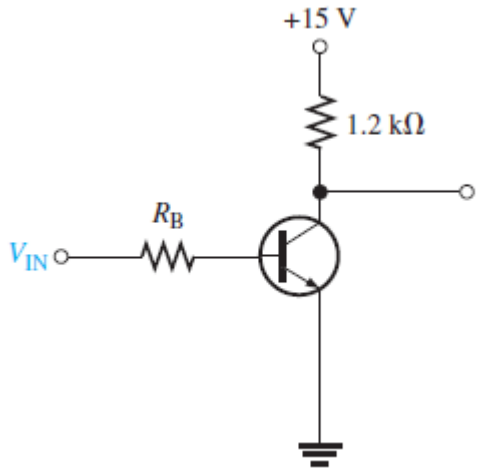
Sol 14	.....

Q15	A certain phototransistor in a circuit has a $\beta_{DC} = 200$. If $I_\lambda = 100\ \mu A$, what is the collector current?
Sol 15	20 mA

Q16	Determine the emitter current in the phototransistor circuit in Figure 4–60 if, for each lm/m^2 of light intensity, 1 μA of base current is produced in the phototransistor. 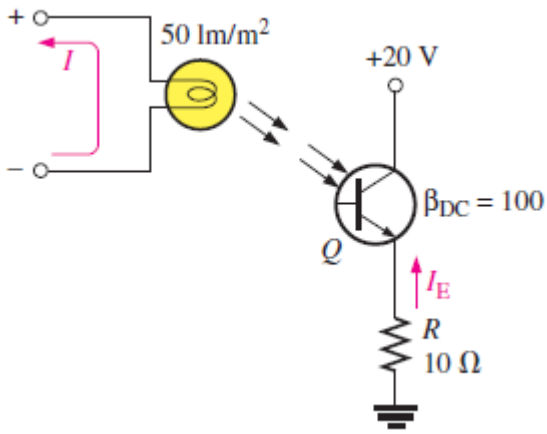
Sol 16	.....

Q17	A particular optical coupler has a current transfer ratio of 30 percent. If the input current is 100 mA, what is the output current?
Sol 17	30 mA

Q18	The optical coupler shown in Figure 4–61 is required to deliver at least 10 mA to the external load. If the current transfer ratio is 60 percent, how much current must be supplied to the input? 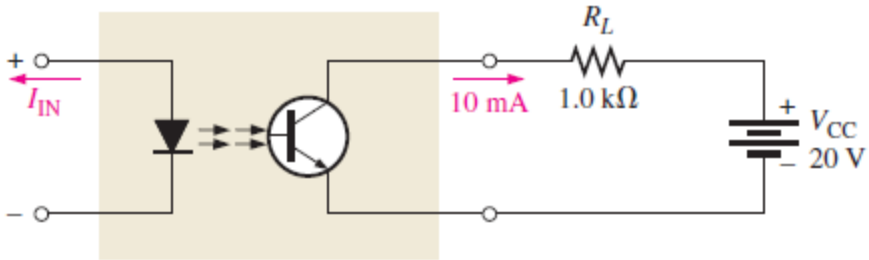
Sol 18	.....