Circuits I – Assignment 03

Circuits Simplification techniques

#	Student ID	Student Name	Grade (10)
-			

Delivery Date	

١. يتم تسليم التمرين محلولا في خلال أسبوع من تاريخ التمرين، و يتم حذف درجتين من التمرين عن كل أسبوع تأخير
٢. يتم التسليم لمعيد المقرر مباشرة
٣. تتم أجابه التمرين في نفس ورق الأسئلة

Q1	**2.29** All resistors in Fig. 2.93 are 5 Ω each. Find R_{eq}. 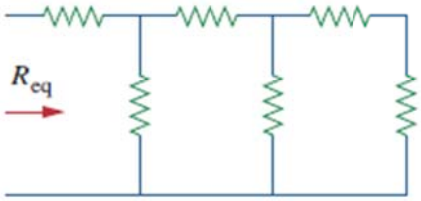
Sol 1	.....

Q2	**2.31** For the circuit in Fig. 2.95, determine i_1 to i_5. 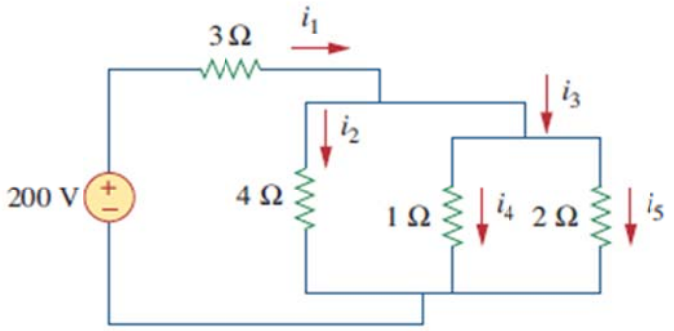
Sol 2	.....

Q3

2.36 Find i and V_o in the circuit of Fig. 2.100.

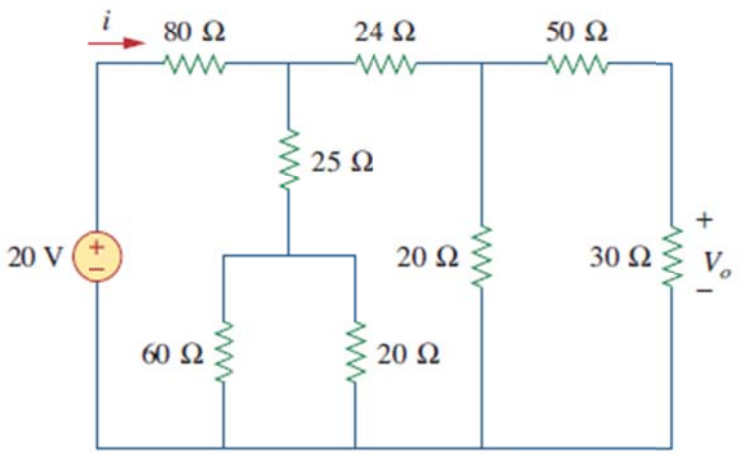

Sol 3

Q4	**2.40** For the network in Fig. 2.104, find I and R_{eq}. 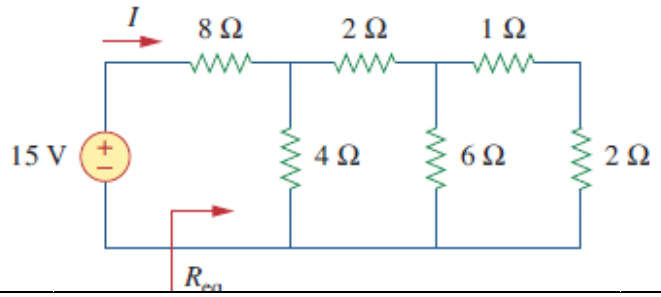
Sol 4	.....

Q5

2.45 Find the equivalent resistance at terminals *a-b* of each circuit in Fig. 2.109.

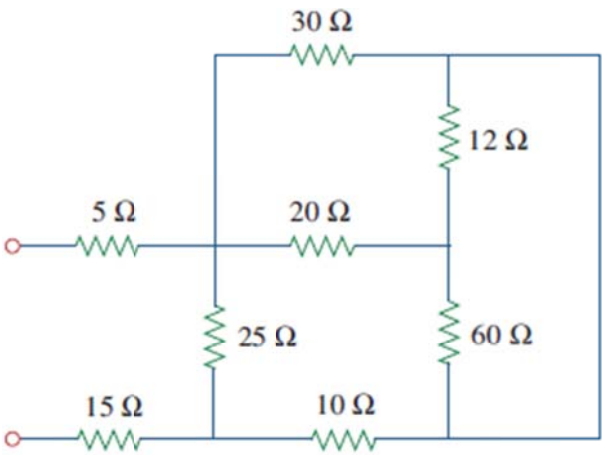

(b)

Sol 5

Q6	**2.34** Using series/parallel resistance combination, find the equivalent resistance seen by the source in the circuit of Fig. 2.98. Find the overall absorbed power by the resistor network. 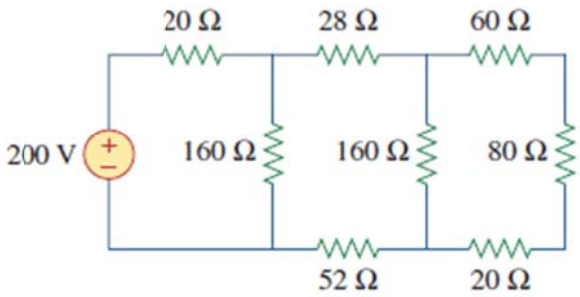
Sol 6	.....

Q7	**2.55** Calculate I_o in the circuit of Fig. 2.119. 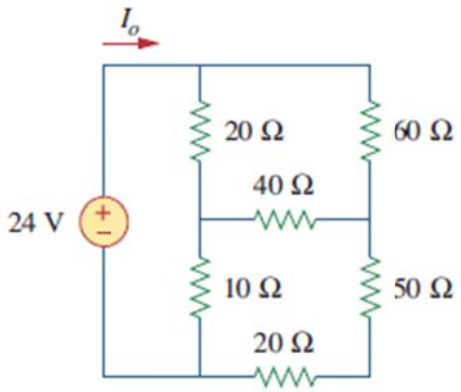
Sol 7	

Q8	**2.56** Determine V in the circuit of Fig. 2.120. 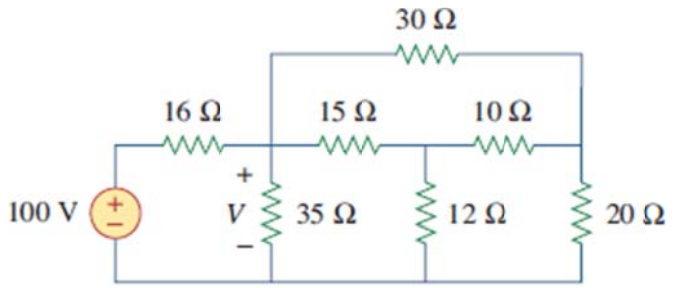
Sol 8	.....

Q9	**2.60** If the three bulbs of Prob. 2.59 are connected in parallel to the 120-V source, calculate the current through each bulb. 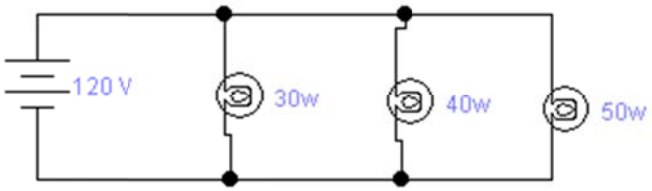
Sol 9	.....

Q10	**2.65** A d'Arsonval meter with an internal resistance of 1 kΩ requires 10 mA to produce full-scale deflection. Calculate the value of a series resistance needed to measure 50 V of full scale.
Sol 10	.....

Q11

2.67 (a) Obtain the voltage V_o in the circuit of Fig. 2.127(a).

(b) Determine the voltage V_o' measured when a voltmeter with 6-kΩ internal resistance is connected as shown in Fig. 2.127(b).

(c) The finite resistance of the meter introduces an error into the measurement. Calculate the percent error as

$$\left|\frac{V_o - V_o'}{V_o}\right| \times 100\%$$

(d) Find the percent error if the internal resistance were 36 kΩ.

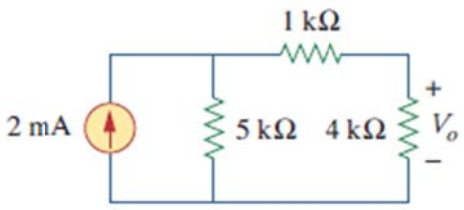

(a)

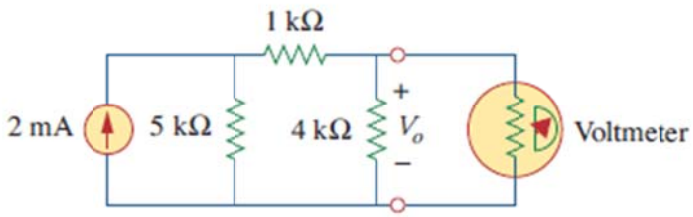

(b)

Sol 11	…… …… …… …… …… …… …… …… …… …… …… …… ……